On Board Diagnostic (OBD)

On Board Diagnostic (OBD), technical data

Equipment

- Data is transmitted between the control module and the VAS5051 tester or VAG1551 Scan Tool (ST) via operating mode "Rapid Data Transfer".
- DTC memory is designed for permanent memory and is therefore not dependent on voltage supply.
- Display of stored DTCs occurs after initiation of display mode ⇒ Page 01-16 .
- DTC memory must be erased after malfunction is repaired ⇒ Page 01-16 .

Important:

- Readiness code must be re-generated after every time DTC memory is erased ⇒ Page 01-73 .

cardiagn.com

01-2

- If the ECM recognizes malfunctions that lead to a worsening of emissions values, it indicates them by lighting the Malfunction Indicator Lamp (MIL) -K83- in the instrument cluster. Meaning of Malfunction Indicator Lamp (MIL) -K83- ⇒ Page 01-3 .

- "E-Gas"-relevant malfunctions are also indicated by the warning lamp for Electronic Power Control ("EPC warning lamp").

cardiagn.com

01-3

Malfunction Indicator Lamp (MIL), significance

If the ECM recognizes malfunctions that lead to a worsening of emissions values, it indicates them by lighting the Malfunction Indicator Lamp (MIL).

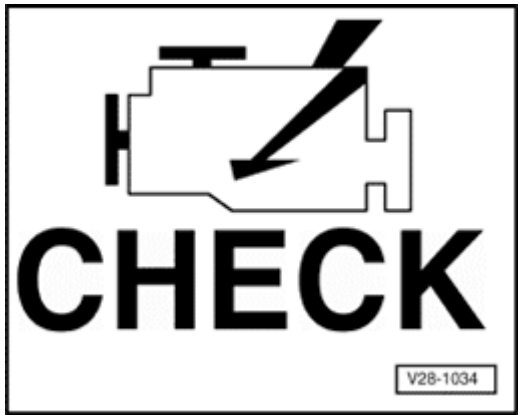

Installation location of Malfunction Indicator Lamp (MIL)

The Engine Control Module (ECM) switches on the Malfunction Indicator Lamp (MIL) after ignition is switched on. Shortly after engine is started, the exhaust MIL will go out. This requires, first of all, that the Engine Control Module (ECM) does not detect a malfunction that worsens the emissions values and, secondly, that activation of the lamp by the Engine Control Module (ECM) is OK.

If malfunctions that worsen emissions are recognized during operation of the engine, the ECM switches on the exhaust MIL in instrument cluster. (These malfunctions are listed in the DTC table). An entry is made in DTC memory at the same time.

The Malfunction Indicator Lamp (MIL) can blink or remain lit continuously. DTC memory should be checked in either case ⇒ Page 01-16 .

cardiagn.com

01-4

Continuously lit:

There is a malfunction that causes increased emissions. Check DTC memory for Motronic ECM and automatic transmission (if installed).

Check DTC memory if there is a driveability problem or a customer complaint, but the Malfunction Indicator Lamp (MIL) is not lit. There may be DTCs stored that do not cause the exhaust MIL to light up immediately, but only after engine is started again and malfunction is recognized again.

Blinking:

There is a malfunction that causes damage to the catalytic converter in this driving condition (e.g. combustion misfire). In this case, vehicle must only be driven at reduced power!

Note:

Catalytic converter must be checked after malfunction is repaired.

cardiagn.com

01-5

Malfunction Indicator Lamp (MIL), checking

Special tools and equipment

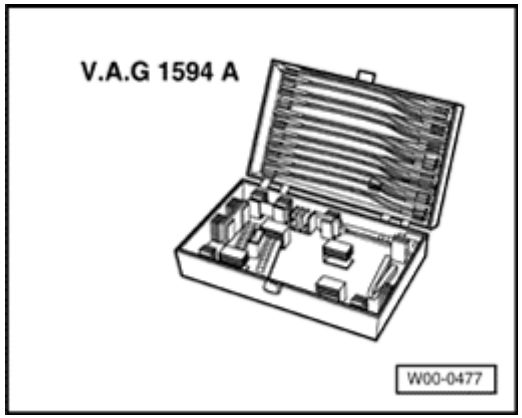

- VAG1594A

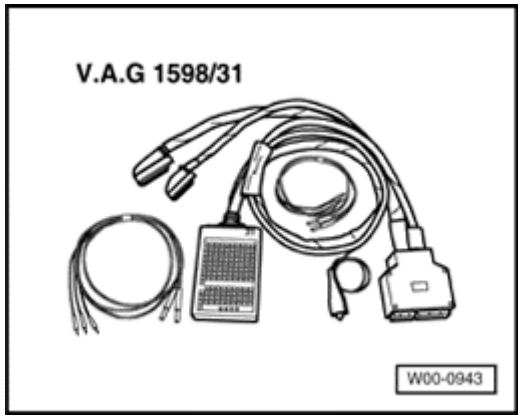

- VAG1598/31

cardiagn.com

01-6

Function test of warning lamp

- Switch ignition on.

  ♦ Exhaust MIL must light up

A- Exhaust MIL does not light up

- Connect VAG1598/31 test box at wiring harness to Engine Control Module (ECM), do not connect ECM ⇒ Page 24-19 .

- Bridge sockets 1 and 47 of test box.

- Switch ignition on.

  ♦ Warning lamp must light up.

If warning lamp does not light up:

- Switch ignition off.

- Remove instrument cluster:

⇒ *Repair Manual, Electrical Equipment, Repair Group 90; Instrument cluster, removing and*

cardiagn.com

installing

cardiagn.com

01-7

- Check following wire connection for open circuit and short circuit to B+:

Test box VAG1598/31 Socket	Instrument cluster Terminal
47	⇒ *Electrical Wiring Diagrams, Troubleshooting & Component Locations*

- Repair open circuit or short circuit if necessary.

If wire connection is OK:

- Replace Engine Control Module (ECM) ⇒ Page 24-23

cardiagn.com

B- Exhaust MIL remains constantly lit

- Check DTC memory of Engine Control Module (ECM) ⇒ Page 01-16 .

If no DTCs are stored:

- Connect VAG1598/31 test box at wiring harness to Engine Control Module (ECM), do not connect ECM ⇒ Page 24-19 .

- Remove instrument cluster:

⇒ *Repair Manual, Electrical Equipment, Repair Group 90; Instrument cluster, removing and installing*

- Check following wire connection for short circuit to Ground (GND):

Test box VAG1598/31 Socket	Instrument cluster Terminal
47	⇒ *Electrical Wiring Diagrams, Troubleshooting & Component*

cardiagn.com

	Locations

- Repair short circuit if necessary.

If wire connection is OK:

- Replace Engine Control Module (ECM) ⇒ Page 24-23

cardiagn.com

01-9

Safety precautions

If special testing equipment is required during road test, note the following:

WARNING!

- ***Test equipment must always be secured to the rear seat and operated from there by a second person.***

- ***If test and measuring equipment is operated from the passenger seat, the person seated there could be injured in the event of an accident involving deployment of the passenger-side airbag.***

cardiagn.com

01-10

VAS5051 tester or VAG1551 scan tool, connecting and selecting functions

Test requirements:

- Fuses for engine electronics OK

⇒ *Electrical Wiring Diagrams, Troubleshooting & Component Locations*

- Fuel Pump (FP) relay OK; checking ⇒ Page 24-53 .
- Battery voltage at least 12.7 V
- Ground (GND) connections at engine and transmission OK

Procedure

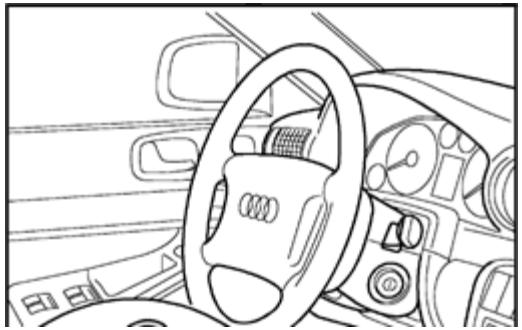

- Connect VAS5051 tester to vehicle with VAS5051/1 diagnostic wire. Alternately, VAG1551 Scan Tool (ST) can also be attached using VAG1551/3A adapter.

Note:

Data Link Connector (DLC) is located in front left knee bolster.

cardiagn.com

01-11

WARNING!

Observe safety precautions ⇒ ***Page 01-9*** .

Note:

The following description only explains implementation of On Board Diagnostic using VAG1551 Scan tool. When using the VAS5051 tester, observe instructions in the tester's user manual.

VAG - On Board Diagnostic (OBD) HELP

1- Rapid data transfer1)

2- Blink code output1)

Indicated on display

1) Operating modes 1 and 2 are displayed alternately

Note:

If nothing appears in display:

- Perform troubleshooting procedure after "troubleshooting procedure leak test":

⇒ *Electrical Wiring Diagrams, Troubleshooting & Component Locations*

cardiagn.com

01-12

Depending on desired function ⇒ Table "Selectable functions", ⇒ Page 01-15 :

- Switch ignition on.

or

- Start engine.

- Press -Print- button to turn on Scan Tool (ST) printer. Indicator lamp in button must light up.

- Press button 1 to select "Rapid data transfer" operating mode 1.

Rapid data transfer	**HELP**
Enter address word XX	

When indicated on display

Note:

The address word 00 initiates the automatic test sequence, i.e. it results in a DTC check on all OBD capable systems in the vehicle via rapid data transfer.

- Press buttons -0- and -1- to select "engine electronics" and press -Q- button to confirm input.

4B0906018Q 1.8 L R4/5VT G 0008	→
Coding 07551	**WSC 12345**

VAG1551 Scan Tool (ST) display indicates control module identification, e.g.

cardiagn.com

01-13

Note:

Control module identification can be printed by pressing the PRINT key on the VAG1551 scan tool.

Control module identification (example)

♦ 4B0906018Q	part number; allocation ⇒ *Parts Catalog*
♦ 1.8L	Engine displacement
♦ R4/5VT	Inline engine, 4 cylinders / 5 valve turbo
♦ "G" i.e. no indication	Vehicle with or without cruise control system
♦ 0008	Data version (software version) of control module
♦ Coding 07551	Control module coding
♦ WSC 12345	Factory identification of VAG1551, with which the last coding was performed

- Press→button.

Rapid data transfer **HELP**

< Indicated on display (function selection)

cardiagn.com

Select function XX

cardiagn.com

01-14

Note:

- *It will be possible to display the control module identification again after pressing buttons -0- and -1- to select "Check Control Module Versions" and confirming with the -Q- button.*

Rapid data transfer HELP

Control module not responding!

- *When indicated on display*

- Perform troubleshooting procedure after "troubleshooting procedure leak test":

⇒ *Electrical Wiring Diagrams, Troubleshooting & Component Locations*

Rapid data transfer HELP

K-wire does not switch to Ground

Rapid data transfer HELP

K-wire does not switch to B+

Rapid data transfer HELP

Malfunction in communication set-up

cardiagn.com

01-15

Selectable functions

VAS5051 vehicle diagnostic, testing and information system or VAG1551 Scan Tool (ST)		Ignition on,engine off	Engine running at idle	Vehicle in drive mode	page
Address words					
01	Engine electronics	Yes	Yes	Yes	⇒ Page 01-10
00	Automatic test sequence	Yes	Yes	Yes	⇒ Page 01-12
Functions					
01	Check Control Module Versions	Yes	Yes	Yes	⇒ Page 01-14
02	Check DTC Memory	No	Yes	Yes	⇒ Page 01-16
03	Output Diagnostic Test Mode (DTM)	Yes	No	No	⇒ Page 01-49
04	Basic Setting	Yes	Yes	Yes	⇒ Page 01-58
05	Erase DTC Memory	Yes	Yes	Yes	⇒ Page 01-16
06	End Output	Yes	Yes	Yes	⇒ Page 01-18
07	Code Control Module	Yes	No	No	⇒ Page 01-62
08	Read measuring value block	Yes	Yes	Yes	⇒ Page

cardiagn.com

				01-65

cardiagn.com

DTC memory, checking (function 02) and erasing (function 05)

- Connect VAS5051 tester or VAG1551 scan tool and select control module for engine electronics using "address word" 01 ⇒ Page 01-10 . Engine should run at idle.

Note:

If engine doesn't start, crank engine using starter for at least 5 seconds. Do not switch ignition off afterward under any circumstance.

Rapid data transfer **HELP** **Select function XX**	When indicated on display

- Press buttons -0- and -2- to select "Check DTC memory" and press -Q- button to confirm input.

No malfunction recognized	When indicated on display

- Press →button.

or

X malfunctions recognized!	When indicated on display

When printer is switched on, stored DTCs are shown in sequence and printed.

cardiagn.com

01-17

- Find printed DTCs in DTC table and repair ⇒ Page 01-19 .

Note:

- *If there are no DTCs in DTC memory, DTC memory should not be unnecessarily erased or else readiness code will be lost.*
- *If DTC memory was erased, readiness code must be re-generated ⇒ Page 01-73 .*

- Press→button.

Rapid data transfer **HELP** **Select function XX**	When indicated on display

- Press buttons -0- and -5- to select "Erase DTC memory" and press -Q- button to confirm input.

Note:

WARNING! **DTC memory was not checked**	*When indicated on display*

Procedure was not followed exactly.

- Check DTC memory.

DTC memory will not be erased under the following conditions:

- *Ignition switched off after DTC memory was checked.*

cardiagn.com

- *A static malfunction was not repaired.*

Rapid data transfer →

DTC Memory is erased!

When indicated on display

cardiagn.com

- Press →button.

- Check DTC memory again after repair work and erase it if necessary.

Note:

This causes DTCs to be erased that were stored during repair of malfunction, e.g. because harness connectors were disconnected.

- If DTC memory was erased, readiness code must be re-generated ⇒ Page 01-73 .

End Output

Rapid data transfer **HELP** **Select function XX**	When indicated on display

- Press buttons -0- and -6- to select "End output" and press -Q- button to confirm input.

Rapid data transfer **HELP** **Enter address word XX**	When indicated on display

- Switch off ignition and disconnect diagnostic cable.

cardiagn.com

Diagnostic Trouble Code (DTC) table

Note:

- *When malfunctions occur in monitored sensors or components, Diagnostic Trouble Codes (DTCs) are stored in DTC memory with a description of the malfunction type.*
- *"E-Gas"-relevant malfunctions are also indicated in the instrument cluster by the warning lamp for Electronic Power Control ("EPC warning lamp"); Notes for E-gas system ⇒ Page 24-113 .*
- *Malfunctions that worsen emissions are also indicated by an exhaust warning lamp (MIL) that is also located in the instrument cluster. There are malfunctions that cause the exhaust warning lamp to light up immediately after recognition. Malfunctions can also occur that do not cause the exhaust MIL to light up immediately, but only if malfunction is recognized again after repeated engine starts. Meaning of exhaust MIL ⇒ Page 01-3 .*
- *The DTC table is organized by the 5 digit code at left.*
- *If a stored DTC does not recur within the next 40 warm-up cycles, the DTC will be erased automatically.*
- *Malfunctions that occur only sporadically (temporary malfunctions) are are identified by the letters "SP" (sporadic malfunction) on the VAG1551 scan tool display. The word sporadic means "appearing or occurring at irregular intervals, occasional".*
- *Do not immediately replace components that the VAG1551/VAS5051 suggests are faulty, instead: Check wire connections and harness connectors to these components according to wiring diagram. Also check Ground (GND) connections according to wiring diagram. This is particularly valid when malfunctions are displayed as "sporadically occurring" (SP).*

cardiagn.com

- *If the connector is disconnected from the ECM or the battery is disconnected, all adaptation values in the control module are erased. DTC memory content will remain intact however. If the engine is started after this, a rough, uneven idle can result. In this case, engine must be allowed to run at idle for a few minutes until adaptation procedure has been completed.*

- *If DTC memory was erased ⇒ Page 01-16 , readiness code must be re-generated ⇒ Page 01-73 .*

cardiagn.com

01-20

DTC codes 16485 - 17624

DTC		DTC text	Corrective action
SAE	VAG		
P0101	16485	Mass Air Flow (MAF) sensor -G70- Implausible signal	- Check Mass Air Flow (MAF) sensor ⇒ Page 24-60
P0102	16486	Mass Air Flow (MAF) sensor -G70- Signal too small	
P0103	16487	Mass Air Flow (MAF) sensor -G70- Signal too large	
P0106	16490	MAP sensor -G71-/BARO sensor -F96- Implausible signal[1)]	⇒ *Repair Manual, 1.8 Liter 4-Cyl. 5V Turbo Engine Mechanical, Engine Code (s): AEB, ATW, Repair Group 21, Charge air system with turbocharger, checking*
P0112	16496	Intake Air Temperature (IAT) sensor -G42- Signal too small	- Intake Air Temperature (IAT) sensor, checking ⇒ Page 28-21
P0113	16497	Intake Air Temperature (IAT) sensor -G42- Signal too large	

cardiagn.com

[1)] Intake manifold pressure is determined by the charge air pressure sensor -G31- (instead of -G71- as indicated), air pressure is determined by the Barometric Pressure (BARO) sensor -F96- (in ECM).

cardiagn.com

01-21

DTC		DTC text	Corrective action
SAE	VAG		
P0116	16500	Engine Coolant Temperature (ECT) sensor -G62- Implausible signal	- Engine Coolant Temperature (ECT) sensor, checking ⇒ Page 28-30
P0117	16501	Engine Coolant Temperature (ECT) sensor -G62- Signal too small	
P0118	16502	Engine Coolant Temperature (ECT) sensor -G62- Signal too large	
P0130	16514	Bank 1, sensor 1 Electrical malfunction in circuit	- Check Oxygen Sensor (O2S) and oxygen sensor control before Three Way Catalytic Converter (TWC) ⇒ Page 24-71
P0131	16515	Bank 1, sensor 1 Voltage too low	
P0132	16516	Bank 1, sensor 1 Voltage too high	
P0133	16517	Bank1, Sensor 1 Signal too slow	
P0134	16518	Bank 1, sensor 1	

cardiagn.com

		No activity	

cardiagn.com

01-22

DTC		DTC text	Corrective action
SAE	VAG		
P0136	16520	Bank 2, sensor 1 Electrical malfunction in circuit	- Check Oxygen Sensor (O2S) and oxygen sensor control behind Three Way Catalytic Converter (TWC) ⇒ Page 24-87
P0137	16521	Bank1, Sensor 2 Voltage too low	
P0138	16522	Bank1, Sensor 2 Voltage too high	
P0139	16523	Bank1, Sensor 2 Signal too slow	
P0140	16524	Bank1, Sensor 2No activity	
P0236	16620	Charge air pressure sensor -G31- Implausible signal	⇒ *Repair Manual, 1.8 Liter 4-Cyl. 5V Turbo Engine Mechanical, Engine Code(s): AEB, ATW, Repair Group 21, Charge air system with turbocharger, checking*
P0237	16621	Charge air pressure sensor -G31- Signal too small	
P0238	16622	Charge air pressure sensor -G31-	

cardiagn.com

		Signal too large	

cardiagn.com

01-23

DTC		DTC text	Corrective action
SAE	VAG		
P0300	16684	Combustion misfire detected	- Check fuel pressure ⇒ Page 24-33 - Check fuel injectors ⇒ Page 24-38 - Check spark plugs and ignition wires with connector - Ignition coils with power output stages Checking ⇒ Page 28-4 - Check misfire recognition ⇒ Page 28-51 - Fill fuel tank with fuel
P0301	16685	Cyl. 1 combustion misfire detected	
P0302	16686	Cyl. 2 combustion misfire detected	
P0303	16687	Cyl. 3 combustion misfire detected	
P0304	16688	Cyl. 4 combustion misfire detected	
P0321	16705	Engine Speed (RPM) sensor -G28- Implausible signal	- Check sender for fuel gauge ⇒ Page 28-26
P0322	16706	Engine Speed (RPM) sensor -G28- No signal	

cardiagn.com

01-24

DTC		DTC text	Corrective action
SAE	VAG		
P0327	16711	Knock Sensor (KS) 1 -G61- Signal too small	- Check knock sensor ⇒ Page 28-41
P0328	16712	Knock Sensor (KS) 1 -G61- Signal too large	
P0332	16716	Knock Sensor (KS) 2 -G66- Signal too small	
P0333	16717	Knock Sensor (KS) 2 -G66- Signal too large	
P0341	16725	Camshaft Position (CMP) sensor -G40- Implausible signal	- Check Camshaft Position (CMP) sensor ⇒ Page 28-45

cardiagn.com

01-25

DTC		DTC text	Corrective action
SAE	VAG		
P0411	16795	Secondary air system Throughput faulty	- Check combination valve. ⇒ *Repair Manual, 1.8 Liter 4-Cyl. 5V Turbo Engine Mechanical, Engine Code(s): AEB, ATW, Repair Group 26; Checking Secondary Air Injection (AIR) system* - Check hose setup (Secondary Air Injection -AIR- solenoid valve); check intake system for leaks (false air) ⇒ Page 24-68
P0422	16806	Bank 1, main catalytic converter Not effective enough	- Generate readiness code ⇒ Page 01-73 . If the same malfunction is indicated again, replace catalytic converter. ⇒ *Repair Manual, 1.8 Liter 4-Cyl. 5V Turbo Engine Mechanical, Engine 1.8 Liter 4-Cyl. 5V Turbo Engine Mechanical, Engine Code(s): AEB, ATW, Repair Group 26*
P0441	16825	Tank ventilation system Throughput faulty	- Check Evaporative Emission (EVAP) canister purge regulator valve ⇒ Page 24-107

cardiagn.com

01-26

DTC		DTC text	Corrective action
P0442	16826	Tank ventilation system Small leak detected	- Checking fuel supply and ventilation systems for leaks ⇒ *Repair Manual, Fuel Supply System, Repair Group 20; Fuel supply; EVAP canister system components, servicing; tank leak diagnostic, performing.*
P0455	16839	Tank ventilation system Large leak detected	
P0456	16840	Tank ventilation system Pinhole leak detected	- Checking EVAP system for leaks using KLI9210 EVAP tester ⇒ *Repair Manual, Fuel Supply System, Repair Group 20*

cardiagn.com

01-27

DTC		DTC text	Corrective action
SAE	VAG		
P0501	16885	Vehicle speed signal Implausible signal	- Checking Vehicle Speed Signal (VSS) ⇒ Page 24-157
P0506	16890	Idle control RPM below specified value	- Check throttle valve control module ⇒ Page 24-120 - Check hose setup (Secondary Air Injection -AIR- solenoid valve); check intake system for leaks (false air) ⇒ Page 24-68
P0507	16891	Idle control RPM above specified value	
P0560	16944	Voltage supply Implausible signal	- Check voltage supply for control module ⇒ Page 28-36
P0562	16946	Voltage supply Voltage too low	
P0563	16947	Voltage supply Voltage too high	
P0571	16955	Brake light switch -F- [1)] Implausible signal	- Check brake light switch and brake pedal switch ⇒ Page 24-143

[1)] Brake pedal switch -F47- is monitored in addition to brake light switch -F-.

cardiagn.com

01-28

DTC		DTC text	Corrective action
SAE	VAG		
P0601	16985	Control module faulty	- Replacing Engine Control Module (ECM) ⇒ Page 24-23
P0604	16988	Control module faulty	
P0605	16989	Control module faulty	
P0685	17069	Main relay -J271- Open circuit	- Check motronic Engine Control Module (ECM) power supply relay -J271- ⇒ Page 28-13
P1102	17510	Bank 1, sensor 1, heating circuit Short circuit to B+	- Check oxygen sensor heating ⇒ Page 24-99
P1105	17513	Bank 1, sensor 2, heating circuit Short circuit to B+	
P1111	17519	Oxygen sensor control, bank 1 System too lean	- Check oxygen sensor control behind catalytic converter ⇒ Page 24-71
P1112	17520	Oxygen sensor control, bank 1 System too rich	

cardiagn.com

01-29

DTC		DTC text	Corrective action
SAE	VAG		
P1113	17521	Bank 1, sensor 1 Internal resistance too high	- Check oxygen sensor heating ⇒ Page 24-99
P1114	17522	Bank 1, sensor 2 Internal resistance too high	
P1115	17523	Bank 1, sensor 1, heating circuit Short circuit to Ground (GND)	
P1116	17524	Bank 1, sensor 1, heating circuit Open circuit	
P1117	17525	Bank 1, sensor 2, heating circuit Short circuit to Ground (GND)	
P1118	17526	Bank 1, sensor 2, heating circuit Open circuit	

cardiagn.com

01-30

DTC		DTC text	Corrective action
SAE	VAG		
P1127	17535	Bank 1, mixture adaptation (mult.) System too rich	- Road test vehicle (fuel in oil). - Check fuel system pressure ⇒ Page 24-33 - Check Mass Air Flow (MAF) sensor ⇒ Page 24-60 - Check intake system for leaks (false air) ⇒ Page 24-68
P1128	17536	Bank 1, mixture adaptation (mult.) System too lean	- Check oxygen sensor before catalytic converter ⇒ Page 24-71 - Check oxygen sensor behind catalytic converter ⇒ Page 24-87 - Check fuel injectors ⇒ Page 24-38 .

Note:

mult. = multiplicative, means that malfunction is valid across entire range of engine speed and engine load.

cardiagn.com

01-31

DTC		DTC text	Corrective action
SAE	VAG		
P1136	17544	Bank 1, mixture adaptation (add.) System too lean	- Road test vehicle (fuel in oil). - Check fuel system pressure ⇒ Page 24-33 - Check Mass Air Flow (MAF) sensor ⇒ Page 24-60 - Check intake system for leaks (false air) ⇒ Page 24-68 - Check oxygen sensor behind catalytic converter ⇒ Page 24-87 - Check Evaporative Emission (EVAP) canister purge regulator valve ⇒ Page 24-107
P1137	17545	Bank 1, mixture adaptation (add.) System too rich	

Note:

add = additive, means that malfunction is only valid at closed throttle (idle).

cardiagn.com

01-32

DTC		DTC text	Corrective action
SAE	VAG		
P1149	17557	Oxygen sensor control, bank 1 Unplausible control value	- Check oxygen sensor adaptation values and control ⇒ Page 24-74 - Check fuel system pressure ⇒ Page 24-33 - Check intake system for leaks (false air) ⇒ Page 24-68
P1171	17579	Angle sensor -2- for throttle drive (power accelerator actuation) -G188- Implausible signal	- Check angle sensor -1- for throttle drive ⇒ Page 24-127
P1172	17580	Angle sensor -2- for throttle drive (power accelerator actuation) -G188- Signal too small	
P1173	17581	Angle sensor -2- for throttle drive (power accelerator actuation) -G188- Signal too large	
P1176	17584	Bank 1 oxygen sensor correction behind catalytic converter Control limit reached	- Check oxygen sensor aging of oxygen sensor before catalytic converter ⇒ Page 24-83 - Check oxygen sensor and oxygen sensor control behind catalytic converter ⇒ Page 24-87

cardiagn.com

01-33

DTC		DTC text	Corrective action
SAE	VAG		
P1198	17606	Bank 1, sensor 2, heating circuit Electrical malfunction	- Check oxygen sensor heating ⇒ Page 24-99
P1213	17621	Cylinder 1 fuel injector -N30- Short circuit to B+	- Check fuel injectors ⇒ Page 24-38 .
P1214	17622	Cylinder 2 fuel injector -N31- Short circuit to B+	
P1215	17623	Cylinder 3 fuel injector -N32- Short circuit to B+	
P1216	17624	Cylinder 4 fuel injector -N33- Short circuit to B+	

cardiagn.com

01-34

DTC codes 17633 -18261

DTC		DTC text	Corrective action
SAE	VAG		
P1225	17633	Cylinder 1 fuel injector -N30- Short circuit to Ground (GND)[1)]	- Check fuel injectors ⇒ Page 24-38 .
P1226	17634	Cylinder 2 fuel injector -N31- Short circuit to Ground (GND)[1)]	
P1227	17635	Cylinder 3 fuel injector -N32- Short circuit to Ground (GND)[1)]	
P1228	17636	Cylinder 4 fuel injector -N33- Short circuit to Ground (GND)[1)]	
P1237	17645	Cylinder 1 fuel injector -N30- Open circuit	
P1238	17646	Cylinder 2 fuel injector -N31- Open circuit	
P1239	17647	Cylinder 3 fuel injector -N32- Open circuit	
P1240	17648	Cylinder 4 fuel injector -N33-	

cardiagn.com

		Open circuit	

cardiagn.com

01-35

DTC		DTC text	Corrective action
SAE	VAG		
P1250	17658	Fuel level too low	- For resulting malfunction ⇒ Note below - Fill fuel tank with fuel, erase DTC memory - Check DTC memory of instrument cluster ⇒ *Repair Manual, Electrical Equipment On Board Diagnostic (OBD), Repair Group 01, OBD of instrument cluster*
P1287	17695	Recirculating valve for turbocharger -N249- Open circuit	⇒ *Repair Manual, 1.8 Liter 4-Cyl. 5V Turbo Engine Mechanical, Engine Code (s): AEB, ATW, Repair Group 21, Charge air system with turbocharger, checking*
P1288	17696	Recirculating valve for turbocharger -N249- Short circuit to B+	
P1289	17697	Recirculating valve for turbocharger -N249- Short circuit to Ground (GND)	

Note:

The DTC "Fuel Level Too Low" is stored in connection with combustion misfires or malfunctions relating to oxygen sensor control when there is/was too little fuel in fuel tank. The DTC is stored as a static malfunction and is not switched to sporadic even if fuel tank has been filled with fuel in the meantime.

cardiagn.com

01-36

DTC		DTC text	Corrective action
SAE	VAG		
P1297	17705	Charger/throtle-valve connection, Pressure loss	- Check hoses between turbocharger and throttle valve: ⇒ *Repair Manual, 1.8 Liter 4-Cyl. 5V Turbo Engine Mechanical, Engine Code(s): AEB, ATW, Repair Group 21; Turbocharger* - Check air pressure system using VAG 1687 charge air system tester: ⇒ *Repair Manual, 1.8 Liter 4-Cyl. 5V Turbo Engine Mechanical, Engine Code(s): AEB, ATW, Repair Group 21; Charge pressure, leak test with VAG 1687*
P1325	17733	Knock control, cyl. 1 Control limit reached	- Check knock control ⇒ Page 28-40
P1326	17734	Knock control, cyl. 2 Control limit reached	
P1327	17735	Knock control, cyl. 3 Control limit reached	
P1328	17736	Knock control, cyl. 4 Control limit reached	

cardiagn.com

01-37

P1335	17743	Engine torque monitoring 2 Control limit exceeded	- Significant leak; check intake system for leaks (false air) ⇒ Page 24-68 - Check Intake Air Temperature (IAT) sensor ⇒ Page 28-21
P1336	17744	Engine torque monitoring Control limit exceeded	- Check Mass Air Flow (MAF) sensor ⇒ Page 24-60 - Check coolant temperature sensor ⇒ Page 28-30

cardiagn.com

01-38

DTC		DTC text	Corrective action
SAE	VAG		
P1337	17745	Bank 1, Camshaft Position (CMP) sensor - G163- Short circuit to Ground (GND)	- Check Camshaft Position (CMP) sensor ⇒ Page 28-45
P1338	17746	Bank 1, Camshaft Position (CMP) sensor - G163- Open circuit/short circuit to B+	
P1340	17748	Camshaft Position (CMP) / crankshaft position sensor incorrect allocation	- Unscrew Camshaft Position (CMP) sensor and check whether shutter wheel is mounted properly at camshaft. (If mounted improperly, locking lug will get squished when mounting bolt is tightened.) - Also check engine timing ⇒ *Repair Manual, 1.8 Liter 4-Cyl. 5V Turbo Engine Mechanical, Engine Code (s): AEB, ATW, Repair Group 13; Engine, disassembling and assembling; removing and installing toothed belt*

cardiagn.com

01-39

DTC		DTC text	Corrective action
SAE	VAG		
P1386	17794	Control module faulty	- Replacing Engine Control Module (ECM) ⇒ Page 24-23
P1387	17795	Control module faulty	
P1388	17796	Control module faulty	
P1410	17818	EVAP canister purge regulator valve -N80- Short circuit to B+	- Check Evaporative Emission (EVAP) canister purge regulator valve ⇒ Page 24-107
P1421	17829	Secondary Air Injection (AIR) solenoid valve -N112- Short circuit to Ground (GND)	⇒ *Repair Manual, 1.8 Liter 4-Cyl. 5V Turbo Engine Mechanical, Engine Code(s): AEB, ATW, Repair Group 26; Checking Secondary Air Injection (AIR) system*
P1422	17830	Secondary Air Injection (AIR) solenoid valve -N112- Short circuit to B+	

cardiagn.com

01-40

DTC		DTC text	Corrective action
SAE	VAG		
P1424	17832	Bank 1, Secondary Air Injection (AIR) system Leak detected	- Check hoses and components of the Secondary Air Injection (AIR) system ⇒ *Repair Manual, 1.8 Liter 4-Cyl. 5V Turbo Engine Mechanical, Engine Code(s): AEB, ATW, Repair Group 26; Checking Secondary Air Injection (AIR) system*
P1425	17833	EVAP canister purge regulator valve -N80- Short circuit to Ground (GND)	- Check Evaporative Emission (EVAP) canister purge regulator valve ⇒ Page 24-107
P1426	17834	EVAP canister purge regulator valve -N80- Open circuit	
P1432	17840	Secondary Air Injection (AIR) solenoid valve -N112- Open circuit	⇒ *Repair Manual, 1.8 Liter 4-Cyl. 5V Turbo Engine Mechanical, Engine Code(s):AEB, ATW, Repair Group 26; Checking Secondary Air Injection (AIR) system*
P1433	17841	Secondary Air Injection (AIR) pump relay -J299- Open circuit	
P1434	17842	Secondary Air Injection (AIR) pump relay -J299-	

cardiagn.com

		Short circuit to B+	
P1435	17843	Secondary Air Injection (AIR) pump relay -J299- Short circuit to Ground (GND)	

cardiagn.com

01-41

DTC		DTC text	Corrective action
SAE	VAG		
P1471	17879	Leak Detection Pump (LDP) tank ventilation system Short circuit to B+	- Evaporative Emission (EVAP) system, diagnostic leak test ⇒ *Repair Manual, Fuel Supply System, Repair Group 20; Parts of the EVAP canister system, servicing*
P1472	17880	Leak Detection Pump (LDP) tank ventilation system Short circuit to Ground (GND)	
P1473	17881	Leak Detection Pump (LDP) tank ventilation system Open circuit	
P1475	17883	Leak Detection Pump (LDP) tank ventilation system Malfunction / no signal	
P1476	17884	Leak Detection Pump (LDP) tank ventilation system Malfunction/vacuum pressure too low	
P1477	17885	Leak Detection Pump (LDP) tank ventilation system Malfunction	
P1478	17886	Leak Detection Pump (LDP) tank	

cardiagn.com

		ventilation system Hose without throughput recognized	

cardiagn.com

01-42

DTC		DTC text	Corrective action
SAE	VAG		
P1500	17908	Fuel Pump (FP) relay -J17- Electrical malfunction in circuit	- Check Fuel Pump (FP) relay ⇒ Page 24-53
P1502	17910	Fuel Pump (FP) relay -J17- Short circuit to B+	
P1517	17925	Main relay -J271- Failure in electrical circuit	- Check motronic Engine Control Module (ECM) power supply relay -J271- ⇒ Page 28-13
P1523	17931	Crash signal from airbag control module Implausible signal[1)]	⇒ *Repair Manual, Body On Board Diagnostic (OBD), Repair Group 01; On Board Diagnostic (OBD) of airbag system*
P1539	17947	Clutch vacuum vent valve switch -F36- Implausible signal	- Check clutch pedal switch ⇒ Page 24-149
P1542	17950	Angle sensor -1- for throttle drive (power accelerator actuation) -G187- Implausible signal	- Check angle sensor -1- for throttle drive ⇒ Page 24-127
P1543	17951	Angle sensor -1- for throttle drive (power accelerator actuation) -G187-Signal too small	
P1544	17952	Angle sensor -1- for throttle drive (power accelerator actuation) -G187-	

cardiagn.com

		Signal too large	

1) DTC is stored upon appropriate signal from airbag control module.

cardiagn.com

01-43

DTC		DTC text	Corrective action
SAE	VAG		
P1545	17953	Throttle valve control Malfunction	- Check throttle valve control module ⇒ Page 24-120
P1546	17954	Wastegate bypass regulator valve -N75- Short circuit to B+	⇒ *Repair Manual, 1.8 Liter 4-Cyl. 5V Turbo Engine Mechanical, Engine Code (s): AEB, ATW, Repair Group 21, Charge air system with turbocharger, checking*
P1547	17955	Wastegate bypass regulator valve -N75- Short circuit to Ground (GND)	
P1548	17956	Wastegate bypass regulator valve -N75- Open circuit	
P1555	17963	Maximum boost pressure exceeded	
P1556	17964	Boost pressure regulation Control limit not reached	
P1557	17965	Boost pressure regulation Control limit exceeded	- Check air pressure system using VAG 1687 charge air system tester ⇒ *Repair Manual, 1.8 Liter 4-Cyl. 5V Turbo Engine Mechanical, Engine Code (s): AEB, ATW, Repair Group 21, Charge pressure, leak test with VAG 1687*

cardiagn.com

01-44

DTC		DTC text	Corrective action
SAE	VAG		
P1558	17966	Throttle drive (power accelerator actuation) -G186- Electrical malfunction in circuit	- Check throttle valve control module ⇒ Page 24-120
P1559	17967	Throttle valve control module -J338- Malfunction in basic setting	- Perform adaptation ⇒ Page 24-121
P1560	17968	Maximum engine speed exceeded	- Repair mechanical damage
P1564	17972	Throttle valve control module -J338- Voltage too low during basic setting	- Charge battery, repeat basic setting
P1565	17973	Throttle valve control module -J338- Lower impact not reached	- Check throttle valve control module ⇒ Page 24-120
P1568	17976	Throttle valve control module -J338- Mechanical malfunction	
P1569	17977	Cruise control switch -E45-	⇒ *Repair Manual, Electrical Equipment On Board Diagnostic (OBD), Repair Group 01; OBD for cruise control system*

cardiagn.com

		Implausible signal	

cardiagn.com

01-45

DTC		DTC text	Corrective action
SAE	VAG		
P1579	17987	Throttle valve control module - J338- Adaptation not started	- Perform adaptation of throttle valve control module while maintaining test requirements ⇒ Page 24-121
P1602	18010	Voltage supply, terminal 30Voltage too low	- Check voltage supply for control module ⇒ Page 28-36
P1603	18011	Control module faulty	- Replacing Engine Control Module (ECM) ⇒ Page 24-23
P1604	18012	Control module faulty	
P1606	18014	Rough terrain info/engine torque from ABS control module Electrical malfunction in circuit	- Check data transfer between Engine Control Module (ECM) and other CAN capable control modules ⇒ Page 24-169
P1609	18017	Crash shut-off was triggered (Crash triggered)[1)]	⇒ *Repair Manual, Body On Board Diagnostic (OBD), Repair Group 01; On Board Diagnostic (OBD) of airbag system* - Erase DTC memory of the Engine Control Module (ECM) after output Diagnostic Test Mode (DTM) of the airbag system ⇒ Page 01-16

DTC is stored upon appropriate signal from airbag control module and also during output Diagnostic Test Mode (DTM) of the airbag system.

cardiagn.com

01-46

DTC		DTC text	Corrective action
SAE	VAG		
P1612	18020	Engine Control Module (ECM) incorrectly coded[1)]	- Code Engine Control Module (ECM) ⇒ Page 01-62
P1624	18032	Request for warning lamp on active[1)]	- Exhaust related malfunction of Transmission Control Module (TCM) - Check DTC memory of Transmission Control Module (TCM) ⇒ *Repair Manual, 5 Spd. Automatic Transmission 01V On Board Diagnostic (OBD), Repair Group 01*
P1626	18034	Powertrain databus Missing message from Transmission Control Module (TCM)	- Check data transfer between Engine Control Module (ECM) and other CAN capable control modules ⇒ Page 24-169

[1)] The Transmission Control Module (TCM) recognized a malfunction that worsens engine emissions. The Transmission Control Module (TCM) sends the DTC to the Engine Control Module (ECM), which then switches on the Malfunction Indicator Lamp (MIL) -K83-. Check Malfunction Indicator Lamp (MIL) -K83- ⇒ Page 01-3 . The message P1624 is simultaneously stored in the Engine Control Module (ECM) as evidence that the Malfunction Indicator Lamp (MIL) -K83- was not switched on due to an engine problem but rather a transmission problem.

cardiagn.com

01-47

DTC		DTC text	Corrective action
SAE	VAG		
P1630	18038	Throttle Position (TP) sensor -G79- Signal too small	- Throttle Position (TP) sensor, checking ⇒ Page 24-133
P1631	18039	Throttle Position (TP) sensor -G79- Signal too large	
P1633	18041	Sender -2- for accelerator pedal position -G185- Signal too small	
P1634	18042	Sender -2- for accelerator pedal position -G185- Signal too large	
P1639	18047	Throttle Position (TP) sensor -G79- and sender -2- for accelerator pedal position -G185- Implausible signal	
P1640	18048	Control module faulty	- Replacing Engine Control Module (ECM) ⇒ Page 24-23

cardiagn.com

01-48

DTC		DTC text	Corrective action
SAE	VAG		
P1648	18056	Powertrain databus faulty	- Check data transfer between Engine Control Module (ECM) and other CAN capable control modules ⇒ Page 24-169
P1649	18057	Powertrain databus Missing message from ABS control module	
P1676	18084	Fault light for power accelerator activation -K132- Electrical malfunction in circuit	- Check fault light for power accelerator activation ⇒ Page 24-116
P1677	18085	Fault light for power accelerator activation -K132- Short circuit to B+	
P1690	18098	Malfunction Indicator Lamp (MIL) -K83- Failure in electrical circuit	- Check Malfunction Indicator Lamp (MIL) ⇒ Page 01-5
P1693	18101	Malfunction Indicator Lamp (MIL) -K83- Short circuit to B+	
P1853	18261	Powertrain databus	- Check data transfer between Engine Control Module (ECM) and other CAN capable control modules ⇒ Page 24-169

cardiagn.com

		Implausible message from ABS control module	

Note:

Fault light for power accelerator activation -K132- (in wiring diagrams, referred to as: fault light for e-gas activation -K132-) is also called the EPC warning lamp.

cardiagn.com

01-49

Output Diagnostic Test Mode (DTM) (function 03)

Note:

- *Output Diagnostic Test Mode (DTM) is only possible with engine idle and ignition switched on.*
- *The electric Fuel Pump (FP) runs during all of output Diagnostic Test Mode (DTM).*
- *In output Diagnostic Test Mode (DTM), individual actuators (with the exception of the fuel injectors) are activated for approximately 1 minute unless the next actuator is selected earlier by pressing the →button.*
- *Actuators are checked either acoustically or by touch.*
- *Output Diagnostic Test Mode (DTM) is aborted if engine is started or an RPM signal is recognized.*
- *Before re-initiating output Diagnostic Test Mode (DTM), engine must be started and the ignition must be switched off and on again.*

cardiagn.com

01-50

Output Diagnostic Test Mode (DTM) activates the following components in the specified sequence:

Activation sequence	
1	Evaporative Emission (EVAP) canister purge regulator valve -N80-
2	Secondary Air Injection (AIR) solenoid valve -N112-
3	Secondary Air Injection (AIR) pump relay -J299-
4	Wastegate bypass regulator valve -N75-
5	Leak Detection Pump (LDP) tank ventilation system
6	Recirculating valve for turbocharger -N249-
7	Cylinder 1 fuel injector -N30-
8	Cylinder 3 fuel injector -N32-
9	Cylinder 4 fuel injector -N33-
10	Cylinder 2 fuel injector -N31-

Test requirement:

- Fuses for engine electronics OK

cardiagn.com

⇒ *Electrical Wiring Diagrams, Troubleshooting & Component Locations*

cardiagn.com

01-51

Test sequence

- Connect VAS5051 tester or VAG1551 scan tool and select control module for engine electronics using "address word" 01 ⇒ Page 01-10 . Ignition must remain switched on.

Rapid data transfer	**HELP**
Select function XX	

When indicated on display

- Press buttons -0- and -3- to select "output Diagnostic Test Mode" and press -Q- button to confirm input.

Rapid data transfer	**Q**
03 - Output Diagnostic Test Mode	

Indicated on display

Activating the EVAP canister purge regulator valve (tank ventilation valve)

- Confirm input using -Q- button.

Note:

The Fuel Pump (FP) relay must trigger, the Fuel Pump (FP) must run, flowing noise at fuel pressure regulator is clearly audible. If Fuel Pump (FP) does not run, check activation ⇒ *Page 24-56* *.*

cardiagn.com

01-52

Output Diagnostic Test Mode (DTM) →

Evap. canister purge regulator valve

Indicated on display:(or, indicated: tank ventilation valve -N80-)

- This valve is activated for approx. 1 minute (clicks), unless →button is pressed first to switch to the next actuator.

If valve is not activated (does not click):

- Check Evaporative Emission (EVAP) canister purge regulator valve -N80- ⇒ Page 24-107 .

Activating the Secondary Air Injection (AIR) solenoid valve

- Press→button.

Output Diagnostic Test Mode (DTM) →

Secondary Air Injection solenoid valve

Indicated on display

- This valve is activated for approx. 1 minute (clicks), unless →button is pressed first to switch to the next actuator.

If valve is not activated (does not click):

- Check Secondary Air Injection (AIR) solenoid valve -N112-:

⇒ *Repair Manual, 1.8 Liter 4-Cyl. 5V Turbo Engine Mechanical, Engine Code(s): AEB, ATW, Repair Group 26; Checking Secondary Air Injection (AIR) system*

cardiagn.com

01-53

Activating the Secondary Air Injection (AIR) pump relay

- Press→button.

Output Diagnostic Test Mode (DTM) →

Secondary Air Injection pump relay

Indicated on display

- The Secondary Air Injection (AIR) pump relay -J299- (in 3-socket relay carrier in the E-box, at left in the plenum chamber , position 2) switches the Secondary Air Injection (AIR) pump motor -V101- on for approx. 1 minute and off in intervals unless the next actuator is selected first by pressing the → button.

If the Secondary Air Injection (AIR) pump motor does not start up in intervals:

- Check Secondary Air Injection (AIR) pump relay -J299-:

⇒ *Repair Manual, 1.8 Liter 4-Cyl. 5V Turbo Engine Mechanical, Engine Code(s): AEB, ATW, Repair Group 26; Checking Secondary Air Injection (AIR) system*

Activating wastegate bypass regulator valve -N75-

- Press →button.

Output Diagnostic Test Mode (DTM) →

Wastegate bypass regulator valve -N75-

Indicated on display

- This valve is activated for approx. 1 minute (clicks), unless→button is pressed first to switch to the next actuator.

cardiagn.com

01-54

If valve is not activated (does not click):

⇒ *Repair Manual, 1.8 Liter 4-Cyl. 5V Turbo Engine Mechanical, Engine Code(s): AEB, ATW, Repair Group 21, Charge air system with turbocharger*

Turbocharger boost pressure recirculation valve, activating

- Press→button.

Output Diagnostic Test Mode (DTM) →

Recirculating valve for turbocharger -N249-

Indicated on display

- This valve is activated for approx. 1 minute (clicks), unless →button is pressed first to switch to the next actuator.

If valve is not activated (does not click):

⇒ *Repair Manual, 1.8 Liter 4-Cyl. 5V Turbo Engine Mechanical, Engine Code(s): AEB, ATW, Repair Group 21, Charge air system with turbocharger*

Activating Leak Detection Pump (diagnostic pump for tank ventilation system)

- Press →button.

Output Diagnostic Test Mode (DTM) →

Indicated on display

cardiagn.com

Leak Detection Pump tank vent. system

- The change-over valve in the LDP is activated for approximately 1 minute (clicks), unless →button is pressed first to switch to the next actuator.

Note:

The click can be heard by listening near the rear left wheelhousing.

cardiagn.com

01-55

If valve is not activated (does not click):

⇒ *Repair Manual, Fuel Supply System, Repair Group 20; components of the EVAP canister system, servicing; Leak Detection Pump (LDP) - V144-, checking.*

Activating fuel injectors

Note:

Fuel injectors are activated according to ignition sequence: Cyl. 1, Cyl. 3, Cyl 4, Cyl. 2.

- Press→button.

Output Diagnostic Test Mode (DTM) →

Cylinder 1 fuel injector -N30-

Indicated on display

- Press→button.

Output Diagnostic Test Mode (DTM) →

Cylinder 1 fuel injector -N30-

Indicated on display

- Fuel injector must click 5 times after →button is pressed.

If injector does not click:

- Check fuel injectors ⇒ Page 24-38 .
- Press→button.

cardiagn.com

Output Diagnostic Test Mode (DTM) →

Cylinder 3 fuel injector -N32-

< Indicated on display

cardiagn.com

01-56

- Press→button.

Output Diagnostic Test Mode (DTM) → **Cylinder 3 fuel injector -N32-**	⮜	Indicated on display ♦ Fuel injector must click 5 times after →button is pressed. If injector does not click: - Check fuel injectors ⇒ Page 24-38 . - Press→button.
Output Diagnostic Test Mode (DTM) → **Cylinder 4 fuel injector -N33-**	⮜	Indicated on display - Press→button.
Output Diagnostic Test Mode (DTM) → **Cylinder 4 fuel injector -N33-**	⮜	Indicated on display ♦ Fuel injector must click 5 times after →button is pressed. If injector does not click: - Check fuel injectors ⇒ Page 24-38 . - Press→button.
Output Diagnostic Test Mode (DTM) → **Cylinder 2 fuel injector -N31-**	⮜	Indicated on display - Press→button.

cardiagn.com

01-57

Output Diagnostic Test Mode (DTM) → **Cylinder 2 fuel injector -N31-**	⮜	Indicated on display ♦ Fuel injector must click 5 times after →button is pressed. If injector does not click: - Check fuel injectors ⇒ Page 24-38 . - Press→button after activation of last fuel injector (cylinder 2).
Output Diagnostic Test Mode (DTM) → **DONE**	⮜	Indicated on display - Press →button.
Rapid data transfer HELP **Select function XX**	⮜	Indicated on display (function selection) ***Note:*** *Before re-initiating output Diagnostic Test Mode (DTM), engine must be started and the ignition must be switched off and on again.*

cardiagn.com

01-58

Basic Setting (function 04)

With ignition on and engine at standstill, the following operations can be performed using "function 04", basic setting:

- Adapt throttle valve control module to Engine Control Module (ECM) ⇒ Display group 060(⇒ Page 24-121)
- Vehicles with automatic transmission: Adaptation of kick down function of accelerator pedal position sensor to ECM ⇒ Display group 063 (⇒ Page 24-139)

With engine running, the following operations can be performed using basic setting:

- Adaptation of oxygen sensor control ⇒ Page 24-74

cardiagn.com

01-59

Test requirements for operations with engine running:

- No DTCs in DTC memory.
- Coolant Temperature at least 80 ° C.
- Electrical consumers switched off (radiator fan must NOT run during test).
- A/C switched off.
- Vehicles with automatic transmission Selector lever in P or N.

Test sequence

- Connect VAS5051 tester or VAG1551 scan tool and select control module for engine electronics using "address word" 01 ⇒ Page 01-10 . Ignition must remain switched on.

or, depending on desired operation:

- Start engine.

Rapid data transfer	**HELP**
Select function XX	

When indicated on display

cardiagn.com

- Press buttons -0- and -4- to select "Initiate basic setting" and press -Q- button to confirm input.

Basic Setting **Q**

Enter display group number XXX

When indicated on display

- Input desired display group number.

cardiagn.com

01-60

Example:

- Press buttons -0-, -0- and -0- to select "display group number 000" and press -Q- button to confirm input.

Note:

After selecting display group number, the EVAP valve is closed and A/C compressor switched off.

System in basic setting 0	**Q**
1 2 3 4 5 6 7 8 9 10	

Indicated on display

Note:

- *For display group number 000, measured values are displayed as a decimal.*
- *Display can be printed out when printer is switched on.*
- *To switch to a different display group, proceed as follows:*

Display group	VAG1551 Scan Tool	VAS5051 tester
higher	Press button -3-	Press ▲ button.
Lower	Press button -1-	Press ▼ button.

- If specified values are obtained in all display fields, press →button.

Rapid data transfer	**HELP**
Select function XX	

Indicated on display (function selection)

cardiagn.com

01-61

Display group 000 (indicated values decimal)		
• Engine running at idle (Coolant Temperature not less than 80 ° C)		
1 2 3 4 5 6 7 8 9 10 ◀ Display fields	Specified value	represents
Adaptation value of mixture formation, partial throttle	103 to 153	-10 to 10%
Adaptation value of mixture formation, closed throttle (idle)	78 to 178	-10 to 10%
Control value of mixture formation	103 to 153	-10 to 10%
Adaptation value, torque loss at idle:	113 to 143	-3 to 3%
Torque at idle	106 to 189	-4.3 to 12.2%
Throttle valve angle	1 to 7	0.4 to 2.75%
Vehicle voltage	142 to 206	10 to 14.5 V
Engine speed (idle speed) • Front Wheel Drive (FWD) • All Wheel Drive (AWD)	 74 to 86 80 to 92	 740 to 860 RPM 800 to 920 RPM
Engine load (without consumers)	21 to 39	15 to 33%
Engine Coolant Temperature (requirement for basic setting)	180 to 205	80 to 105 ° C

cardiagn.com

Code Control Module (function 07)

- Connect VAS5051 tester or VAG1551 scan tool and select control module for engine electronics using "address word" 01 ⇒ Page 01-10 . Ignition must remain switched on.

Rapid data transfer	**HELP**
Select function XX	

When indicated on display

- Press buttons -0- and -7- to select "Code control module" and press -Q- button to confirm input.

Code Control Module	**Q**
Enter code numbers	**XXXXX (0-32000)**

When indicated on display

- Enter control module coding according to code table ⇒ Page 01-64 .

Clarification of coding

XX				Country/Exhaust
	X			Drive/Additional Functions
		X		Transmission
			X	Vehicle model

cardiagn.com

01-63

Coding example	
07551	USA LEV [1] (emissions regulations), Front Wheel Drive (FWD) with ESP [2] , 5 speed Automatic transmission, Audi A4

[1] LEV: Abbreviation for Low Emission Vehicle

[2] ASR/ESP: Abbreviation for Anti-Slip Regulation/Electronic Stability Program

- Confirm input using the -Q- button.

4B0906018M 1.8 L R4/5VT G 0002 →
Coding 16501 WSC 12345

VAG1551 Scan Tool (ST) display indicates control module identification, e.g

- Press →button.

Rapid data transfer HELP
Select function XX

Indicated on display (function selection)

cardiagn.com

01-64

Coding table

Country / Exhaust	07		USA LEV (emissions regulation)
Drive / Additional Functions		5	Front Wheel Drive (FWD) with ASR/ESP
		7	All Wheel Drive (AWD) with Electronic Stability Program (ESP)
Transmission		0	5 speed manual transmision
		5	Automatic transmission 01V
Vehicle model		1	Audi A4

cardiagn.com

Readiness code

The readiness code appears as an 8-digit display in measuring value block 086, display field 1. Each of the 8 digits is allocated to a specific exhaust related system.

During a test sequence which must be performed completely, On Board Diagnostic (OBD) checks the function of each of these systems and then changes the character assigned to it in the 8-digit indication from "1" to "0" once test has been performed successfully.

When the readiness code is generated after a successfully completed test sequence, it reads "0 0 0 0 0 0 0 0" (measuring value block 086, display field 1).

If a single test is completed entirely, but indicated as "not OK", a DTC will be stored in DTC memory. Check DTC Memory ⇒ Page 01-16 .

cardiagn.com

Readiness code is returned to"0 1 1 0 1 1 0 1" if:

- DTC memory was erased,
- Voltage supply to ECM was cut off (e.g. connector disconnected, battery disconnected)
- a new Engine Control Module (ECM) was installed

In this case, the readiness code must be re-generated ⇒ Page 01-73 .

Note:

During driving operation in various load conditions, exhaust relevant tests are performed by the control module and the readiness code is generated on its own. In this case, however, the concluding control possibilities are not available, meaning that it will not be indicated whether the vehicle is free of malfunctions upon transfer to the customer.

cardiagn.com

Read readiness code

Test sequence

- Connect VAS5051 tester or VAG1551 scan tool and select control module for engine electronics using "address word" 01 ⇒ Page 01-10 . Ignition must remain switched on.

Rapid data transfer	HELP
Select function XX	

When indicated on display

- Press buttons -0- and -8- to select "Read Measuring Value Block" and press -Q- button to confirm input.

Read measuring value block	Q
Enter display group number XXX	

When indicated on display

- Press buttons -0-, -8- and -6- to select "display group number 086" and press -Q- button to confirm input.

Read Measuring Value Block 86			→
1	2	3	4

When indicated on display

- Check readiness code in display field 1
  - Specification: 0 0 0 0 0 0 0 0

cardiagn.com

01-70

	Display fields			
	1	2	3	4
Display group 086: Readiness code				
Display	**0 0 0 0 0 0 0 0**	X X X X X X X X	X X X X X X X X	
Indicated	**Ready-Bits** **completed tests**	individual tests carried out	individual tests carried out	
Functional range	**1 = not completed** **0 = completed**	1 = not completed 0 = completed	1 = not completed 0 = completed	
Specified value	**0 0 0 0 0 0 0 0**	X X X X X X X X	X X X X X X X X	
Note	**Significance of readiness code** ⇒ **Page 01-71**			

Note for display field 1:

Display field 1 is the most important. This indicates which system was checked via On Board Diagnostic (OBD) since the last time DTC memory was erased or a new control module was implemented. Once DTC memory is erased, all testable values are set to "1", after the test is performed successfully, the values are set to "0".

cardiagn.com

X	X	X	X	X	X	X	X	Notes for display group 086, display field 1
								Diagnostic of catalytic converter ♦ Indication 0 = test was performed ♦ Indication 1 = test was not performed (generate readiness code ⇒ Page 01-73)
								Indication always 0
								EVAP system ♦ Indication 0 = test was performed ♦ Indication 1 = test was not performed (generate readiness code ⇒ Page 01-73)
								Secondary air system ♦ Indication 0 = test was performed ♦ Indication 1 = test was not performed (generate readiness code ⇒ Page 01-73)
								Indication always 0
								Oxygen sensors ♦ Indication 0 = test was performed ♦ Indication 1 = test was not performed (generate readiness code ⇒ Page 01-73)
								Oxygen sensor heating ♦ Indication 0 = test was performed

cardiagn.com

	♦ Indication 1 = test was not performed (generate readiness code ⇒ Page 01-73)
Indication always 0	

Note:

Readiness code is not generated until all indications in display field 1 display "0"

cardiagn.com

01-72

Once the specified value "0 0 0 0 0 0 0 0" is reached in display field 1:

- Press →button.

Rapid data transfer	**HELP**
Select function XX	

Indicated on display (function selection)

- Check DTC memory as a control measure ⇒ Page 01-16 (there must not be any DTCs stored)

If specified value is not obtained:

- Generate readiness code ⇒ Page 01-73 .

cardiagn.com

01-73

Readiness code, generating

Special Tools and Equipment

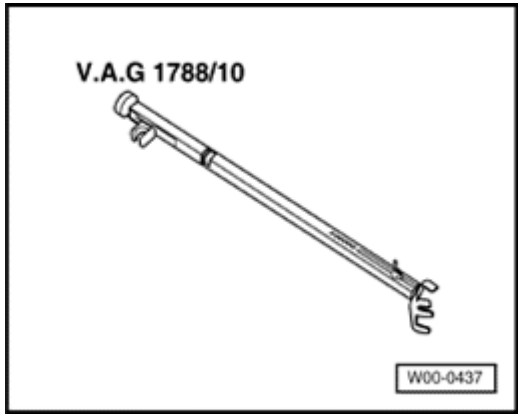

- VAG1788/10 RPM adjuster

Requirements

- Vehicle stationary
- Vehicles with automatic transmission Selector lever in P or N.
- Electrical consumers switched off (radiator fan must NOT run during test).
- A/C switched off.
- Coolant temperature at least 80 ° C ⇒ Display group 004, display field 3. Important: Drive engine warm via road test if possible.

Note:

If, during a work step, the test result is indicated as "OK" immediately after selecting a display group, the test has already been carried out and it is OK to continue on to the next work step.

cardiagn.com

01-74

Work step 1: Check DTC Memory

Test requirement:

- Engine not running, ignition switched on.

- Connect VAS5051 tester or VAG1551 scan tool and select control module for engine electronics using "address word" 01 ⇒ Page 01-10 .

Rapid data transfer **HELP**

Select function XX

When indicated on display

- Press buttons -0- and -2- to select "Check DTC memory" and press -Q- button to confirm input.

X malfunctions recognized!

Number of stored DTCs or "No DTC recognized" will be indicated on display.

If a DTC is stored:

- Repair malfunction, erase DTC memory. Road test vehicle and then check DTC memory as a control measure.

If no DTCs are stored:

- Press →button.

cardiagn.com

01-75

Work step 2: Erase DTC Memory

Test requirement:

- Engine not running, ignition switched on.

Rapid data transfer **HELP** **Select function XX**	When indicated on display - Press buttons -0- and -5- to select "Erase DTC memory" and press -Q- button to confirm input.

Note:

When DTC memory is erased, readiness code is reset and must therefore be re-generated.

Rapid data transfer → **DTC Memory is erased!**	When indicated on display - Press → button.

cardiagn.com

01-76

Work step 3: Adapt throttle valve control module to Engine Control Module (ECM)

Test requirement:

- Engine not running, ignition switched on.

Rapid data transfer	**HELP**
Select function XX	

When indicated on display

- Press buttons -0- and -4- to select "Initiate basic setting" and press -Q- button to confirm input.

Basic Setting	**Q**
Enter display group number XXX	

When indicated on display

- Press buttons -0-, -6- and -0- to select "display group number 060" and press -Q- button to confirm input.

System in basic setting 60			→
1	**2**	**3**	**4**

When indicated on display

- Check specified values in display fields 3 and 4

cardiagn.com

01-77

	Display fields			
	1	2	3	4
Display group 060: Adaptation of throttle valve control module				
Display	xx %	xx %	**x**	**---**
Indicated	Throttle valve angle (angle sensor 1)	Throttle valve angle (angle sensor 2)	**Adaptation step counter**	**Adaptation condition**
Functional range			**0 to 8**	**ADP in progress** **ADP OK** **ERROR**
Specified value	3 to 93 %	97 to 3 %	**8**	**ADP OK**
Note			**After adaptation, the adaptation step counter reaches the number 8 (it is OK for numbers to be skipped).**	**If "ERROR." is displayed: Check DTC memory ⇒ Page 01-16 .** **If specified value is not obtained: ⇒Note, ⇒ Page 24-126**

Note for display field 3:

Different numbers are shown in display field 3 during adaptation that represent the current adaptation condition. It is not particularly important how the adaptation step counter (display field 3) behaves during adaptation, but rather that display field

cardiagn.com

4 indicates the specification "ADP OK" after adaptation.

If specified value "ADP OK" is obtained:

- Press -C- button.

cardiagn.com

01-78

Work step 4: Kick down function, adapting[1)]

[1)] Only vehicles with automatic transmission

Test requirement:

- Engine not running, ignition switched on.

Basic Setting	**Q**
Enter display group number XXX	

When indicated on display

- Press buttons -0-, -6- and -3- to select "display group number 063" and press -Q- button to confirm input.

System in basic setting 63			→
1	**2**	**3**	**4**

When indicated on display

Note:

There will be a prompt: "Operate kickdown".

- Depress accelerator pedal completely, past kick down point, and hold down.

Note:

During adaptation of the kick down point, the VAG1551 will display "Kick down ADP in progress". After successful adaptation of the kick down point, the VAG1551 will display "Kick down ADP OK".

- Check specified value in display field 4:

cardiagn.com

01-79

	Display fields			
	1	2	3	4
Display group 063: Kick down function, adapting				
Display	xx %	xx %	**Kick down**	**---**
Indicated	Sensor 1 for Pedal position	Sensor 2 for Pedal position	**Kick down**	**Adaptation condition**
Functional range			**Kick down**	**operate** **ADP in progress** **ADP OK** **ERROR**
Specified value	12 to 97 %	4 to 49 %	**Kick down**	**ADP OK**
Note				**If "ERROR." is displayed: Check DTC memory ⇒ Page 01-16 .**

Note for display field 4:

"ERROR" can be indicated, for example, if the accelerator pedal is not immediately pressed in response to a request by the tester or if the accelerator pedal is released while adaptation is running despite the fact that adaptation is not yet complete. In both cases, "Basic Setting" must be exited and the adaptation must be performed again.

If specified value "ADP OK" is obtained:

cardiagn.com

- Press -C- button.

cardiagn.com

01-80

Work step 5: Check operating condition of oxygen sensor control

- Start engine (for a vehicle with manual transmission: engage clutch).

Note:

After starting engine, it may be necessary to select the Engine Control Module (ECM) again using "address word" 01 and the function "Initiate basic setting" using "04".

- Install VAG1788/10 RPM adjuster on accelerator pedal and raise engine speed to 2000 RPM.

Test requirement:

- Engine running at 2000 RPM.

Basic Setting	**Q**
Enter display group number XXX	

When indicated on display

- Press buttons -0-, -3- and -0- to select "display group number 030" and press -Q- button to confirm input.

System in basic setting 30			→
1	**2**	**3**	**4**

When indicated on display

- Check oxygen sensor status in display fields 1 and 2.

Note:

cardiagn.com

A few minutes may pass until a diagnostic result is reached.

cardiagn.com

01-81

	Display fields			
	1	2	3	4
Display group 030: Oxygen sensor status				
Display	**X X X**	**X X X**		
Indicated	**Oxygen sensor status, bank 1, sensor 1**	**Oxygen sensor status, bank 2, sensor 1**		
Functional range	**0 = off** **1 = on**	**0 = off** **1 = on**		
Specified value	**1 1 1**	**1 1 0**		

Significance of 3 digit indications in display group 030			
X	X	X	**Display fields 1 and 2**
		X	Oxygen sensor control: 0= not active; 1 = active
	X		Operational readiness of oxygen sensor: 0= not active; 1 = active
X			Condition of oxygen sensor heater: 0= not active; 1 = active

Note:

- *The first position of the 3 digit indication (heating) fluctuates between 0 and 1 at certain operation points.*
- *Oxygen sensor control of oxygen sensor behind catalytic converter (bank 1, sensor 2) is not active without engine load, meaning that the third position of the 3-digit display is 0.*

- Do not start test until indication in display field 1

cardiagn.com

has reached "111" at least once and indication in display field 2 has reached "110" at least once.

cardiagn.com

01-82

Work step 6: Diagnostic of oxygen sensor aging before catalytic converter

Test requirement:

- Engine continues to run at 2000 RPM.

Basic Setting	**Q**
Enter display group number XXX	

When indicated on display

- Press buttons -0-, -3- and -4- to select "display group number 034" and press -Q- button to confirm input.

System in basic setting 34			→
1	**2**	**3**	**4**

When indicated on display

- Check specified value in display field 4:

Note:

A few minutes may pass until a diagnostic result is reached.

cardiagn.com

01-83

	Display fields			
	1	2	3	4
Display group 034: Oxygen sensor aging diagnostic, oxygen sensor before catalytic converter (bank 1)				
Display	xxxx/min	xxx °C	x.x s	---
Indicated	Engine speed (RPM)	Exhaust temperature	Period duration Oxygen sensor before Catalytic converter	Diagnostic condition
Functional range				Test OFF Test ON B1-S2 OK B1-S2 not OK
Specified value	2000 RPM	more than 350 °C	0.0 to 1.0 s	B1-S2 OK
Note				**If "B1-S1 not OK" is displayed: Check DTC memory ⇒ Page 01-16 .**

If specified value "B1-S1 OK" is obtained:

- Press -C- button.

cardiagn.com

01-84

Work step 7: Diagnostic of operational readiness of oxygen sensor behind catalytic converter

Test requirement:

- Engine continues to run at 2000 RPM.

Basic Setting	**Q**
Enter display group number XXX	

When indicated on display

- Press buttons -0-, -3- and -6- to select "display group number 036" and press -Q- button to confirm input.

System in basic setting 36			→
1	**2**	**3**	**4**

When indicated on display

- Check specified value in display field 2:

cardiagn.com

01-85

	Display fields			
	1	2	3	4
Display group 036: Operational readiness of oxygen sensor behind catalytic converter (bank 1)				
Display	x.xxx V	**---**		
Indicated	Oxygen sensor voltage Bank 2, sensor 1	**Diagnostic condition**		
Functional range		**Test OFF** **Test ON** **B1-S2 OK** **B1-S2 not OK**		
Specified value	0.100 to 0.950 V	**B1-S2 OK**		
Note		**If "B1-S2 not OK" is displayed: Check DTC memory ⇒ Page 01-16**		

If specified value B1-S2 OK" is obtained:

- Press -C- button.

cardiagn.com

01-86

Work step 8: Diagnostic of oxygen sensor control system

Test requirement:

- Engine continues to run at 2000 RPM.

Basic Setting	**Q**
Enter display group number XXX	

When indicated on display

- Press buttons -0-, -3- and -7- to select "display group number 037" and press -Q- button to confirm input.

System in basic setting 37			→
1	**2**	**3**	**4**

When indicated on display

- Check specified value in display field 4:

cardiagn.com

01-87

	Display fields			
	1	2	3	4
Display group 037: Diagnostic of oxygen sensor control system (Bank 1)				
Display	xxx %	x.xxx volts	xxx ms	**---**
Indicated	Load	Oxygen sensor voltage Bank 2, sensor 1	Oxygen sensor correction value between bank 1, sensor 1 and bank 1, sensor 2	Diagnostic condition
Functional range				**Test OFF** **Test ON** **System OK** **System not OK**
Specified value	12 to 30 %	0.100 to 0.950 V	-150 to 150 ms	System OK
Note				**If "System not OK" is displayed: Check DTC memory** ⇒ **Page 01-16**

If specified value "Syst. OK" is obtained:

- Press -C- button.

cardiagn.com

01-88

Work step 9: Diagnostic of catalytic converter

Test requirement:

- Engine continues to run at 2000 RPM.

Basic Setting	**Q**
Enter display group number XXX	

When indicated on display

- Press buttons -0-, -4- and -6- to select "display group number 046" and press -Q- button to confirm input.

System in basic setting 46			→
1	**2**	**3**	**4**

When indicated on display

- Check specified values in display fields 2 and 4:

Note:

Catalytic converter diagnostic lasts approx. 60 seconds.

cardiagn.com

01-89

	Display fields			
	1	2	3	4
Display group 046: Diagnostic of catalytic converter (bank 1)				
Display	xxxx/min	xxx °C	x.x	---
Indicated	Engine speed (RPM)	Exhaust temperature	Measurement Catalytic converter - conversion	Diagnostic condition
Functional range				Test OFF Test ON Cat B1 OK Cat B1 not OK
Specified value	2000 RPM	more than 430 °C	0.0 to 0.2	Cat B1 OK
Note				**If "Cat B1 not OK" is displayed: Check DTC memory ⇒ Page 01-16 . If no DTCs are stored, replace catalytic converter.**

If specified value "Cat B1 OK" is obtained:

- Press -C- button.

cardiagn.com

01-90

Work step 10: Diagnostic of Secondary Air Injection (AIR) system

- Remove VAG1788/10 RPM adjuster and leave engine running at idle.

Test requirement:

- Engine running at idle:

Note:

During diagnostic of the Secondary Air Injection (AIR) system, the Secondary Air Injection (AIR) pump will run for several seconds.

Basic Setting	**Q**
Enter display group number XXX	

When indicated on display

- Press buttons -0-, -7- and -7- to select "display group number 077" and press -Q- button to confirm input.

System in basic setting 77			→
1	**2**	**3**	**4**

When indicated on display

- Check specified value in display field 4:

cardiagn.com

01-91

	Display fields			
	1	2	3	4
Display group 077: Secondary Air Injection (AIR) system diagnostic (Bank 1)				
Display	xxxx/min	xx.x g/s	xx.x g/s	**---**
Indicated	Engine speed (RPM)	Air mass	Air mass Secondary air system	**Diagnostic condition**
Functional range				**Test OFF** **Test ON** **System OK** **System not OK** **Aborted**
Specified value	FWD: 740 to 860 RPM AWD: 800 to 920 RPM	2 to 5 g/s	4 to 10 g/s	System OK
Note				**If "System not OK" is displayed: Check DTC memory** ⇒ **Page 01-16**

If specified value "Syst. OK" is obtained:

- Press -C- button.

cardiagn.com

01-92

Work step 11: Diagnostic of tank ventilation valve

Test requirement:

- Engine running at idle:

Basic Setting	**Q**
Enter display group number XXX	

When indicated on display

- Press buttons -0-, -7- and -0- to select "display group number 070" and press -Q- button to confirm input.

System in basic setting 70			→
1	**2**	**3**	**4**

When indicated on display

- Check specified value in display field 4:

Note:

If test is not initiated or if indication switches from "Test ON" to "Test OFF", depress accelerator pedal briefly, test will be repeated.

cardiagn.com

01-93

	Display fields			
	1	2	3	4
Display group 070: Diagnostic of tank ventilation valve				
Display	xx %	xx %		**---**
Indicated	Degree tank ventilation valve is opened	Oxygen sensor control Diagnostic value		**Diagnostic condition**
Functional range				**Test OFF** **Test ON** **TVV OK** **TVV not OK** **Aborted**
Specified value	0 to 99 %	-7.0 to 7.0 %		**TVV OK**
Note				**If "TVV not OK" is displayed: Check DTC memory ⇒ Page 01-16 . Check Evaporative Emission (EVAP) canister purge regulator valve -N80- ⇒ Page 24-107**

If specified value "TVV OK" is obtained:

- Press -C- button.

cardiagn.com

01-94

Work step 12: Diagnostic of tank seal

Test requirements:

- Engine running at idle:
- Fuel filler cap opened briefly (to reduce pressure).

Basic Setting	**Q**
Enter display group number XXX	

When indicated on display

- Press buttons -0-, -7- and -1- to select "display group number 071" and press -Q- button to confirm input.

System in basic setting 71			→
1	**2**	**3**	**4**

When indicated on display

Note:

- *Test lasts approx. 90 seconds.*
- *When the diagnostic of tank seal is performed several times in a row, the fuel filler cap must be opened briefly before each test to release pressure.*

- Check specified value in display field 4:

cardiagn.com

01-95

	Display fields			
	1	2	3	4
Display group 071: Diagnostic of tank seal				
Display	---	---	---	**---**
Indicated	Condition Reed-Terminal	DTC message	System condition	**Diagnostic condition**
Functional range	Reed open Reed closed	Small leak Large leak	System test Measurement END Measurement	**Test OFF** **Test ON** **System OK** **System not OK** **Aborted**
Specified value	Reed open	---	END Measurement	**System OK**
Note				**If "System not OK" is displayed: Check DTC memory ⇒ Page 01-16**

If specified value "Syst. OK" is obtained:

- Press →button.

Rapid data transfer	**HELP**
Select function XX	

Indicated on display (function selection)

Work step 13: Read readiness code

cardiagn.com

- Read readiness code ⇒ Page 01-69 .

cardiagn.com

Read Measuring Value Block (function 08)

Test requirements:

- Coolant Temperature at least 80° C.
- Electrical consumers switched off (radiator fan must NOT run during test).
- A/C switched off.

Test sequence

- Connect VAS5051 tester or VAG1551 scan tool and select control module for engine electronics using "address word" 01 ⇒ Page 01-10 . Engine must run at idle.

Rapid data transfer	**HELP**
Select function XX	

When indicated on display

- Press buttons -0- and -8- to select "Read Measuring Value Block" and press -Q- button to confirm input.

Read measuring value block	**Q**
Enter display group number XXX	

When indicated on display

- Enter desired three digit display group number and confirm by pressing -Q- button.

cardiagn.com

01-66

Note:

Which display group should be chosen depends on current function and component tests.

Read Measuring Value Block 0 →

1 2 3 4 5 6 7 8 9 10

Indicated on display for display group 000

Read Measuring Value Block 1 →

1 2 3 4

Indicated on display (example) for display group 001

Note:

- *Display can be printed out on the paper roll when printer is switched on.*
- *To switch to a different display group, proceed as follows:*

Display group	VAG1551 Scan Tool	VAS5051 tester
Higher	Press button -3-	Press ▲ button.
Lower	Press button -1-	Press ▼ button.

cardiagn.com

24-1

Motronic fuel injection system, servicing

Safety precautions

If special testing equipment is required during road test, note the following:

WARNING!

- ***Test equipment must always be secured to the rear seat and operated from there by a second person.***

- ***If test and measuring equipment is operated from the passenger seat, the person seated there could be injured in the event of an accident involving deployment of the passenger-side airbag.***

To reduce the risk of personal injury and/or damage to the fuel injection and ignition system, always observe the following:

- Only disconnect and reconnect wires for injection and ignition system, including test leads, when ignition is turned off.

- If engine is to be cranked at starting RPM without starting (e.g. for compression testing),

cardiagn.com

disconnect connector from ignition coils and from fuel injectors.

cardiagn.com

- It is possible that the control module will recognize a malfunction and store a DTC during some tests. After completing all tests and repairs, DTC memory should therefore be checked and erased if necessary. Readiness code must be generated after DTC memory is erased ⇒ Page 01-73 .

- Always switch ignition off before cleaning engine.

- The battery should only be disconnected and reconnected when the ignition is turned off, since otherwise the Engine Control Module (ECM) can be damaged.

WARNING!

Fuel system is under pressure! Before opening system, place rags around the connection point. Then release pressure by carefully loosening connection.

cardiagn.com

24-3

Rules of cleanliness

When working on the fuel supply or fuel injection systems, the following "6 rules of cleanliness" should be carefully observed:

- Thoroughly clean all connections and the surrounding area before disconnecting.
- Place parts that have been removed on a clean surface and cover. Use lint-free cloths only!
- Carefully cover over opened components or seal, if repairs are not carried out immediately.
- Only install clean components:Only unpack replacement parts immediately prior to installation. Do not use parts that have been stored loose (in tool boxes etc.)
- When the system is open:Do not work with compressed air if it can be avoided. Do not move vehicle unless absolutely necessary.
- Disconnected electrical harness connectors:Protect from dirt and moisture. Be sure harness connector is dry before connecting.

cardiagn.com

24-4

Technical data

Engine identification		ATW (1.8 L / 5V/ 110 kW-engine)
Idle speed Engine speed cannot be adjusted, it is regulated by idle stabilization	Front Wheel Drive (FWD) All Wheel Drive (AWD)	740 to 860 RPM 800 to 920 RPM
Engine speed (RPM) limitation via fuel injector shut-off		about 6800 RPM
Fuel pressure at idle speed	Vacuum hose connected	about 3.5 bar positive pressure
	Vacuum hose disconnected	about 4.0 bar positive pressure
Residual pressure after 10 min.		at least 2.5 bar positive pressure
Fuel injectors	Injection stream	Dual-hole nozzle / same for all injectors
	Injection quantity (30 s)	135 ± 10 ml
	Resistance (room temperature)	12 to 13 Ω

cardiagn.com

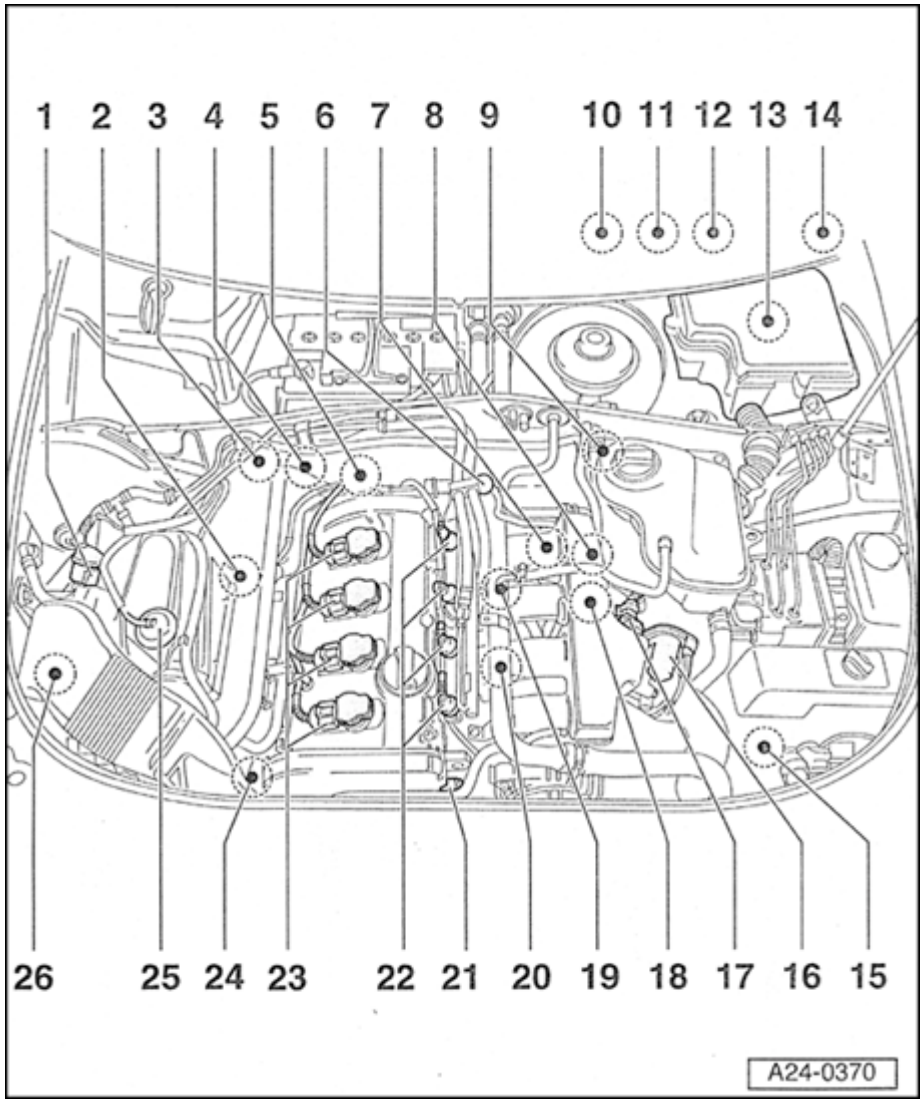

Component locations, overview

Note:

Component location without illustration:

---- - Leak Detection Pump (LDP) -V144-

- Behind rear left wheelhousing liner

1 - Evaporative Emission (EVAP) canister purge regulator valve -N80-

- Checking ⇒ Page 24-107

2 - Heated Oxygen Sensor (HO2S) -G39- before catalytic converter, 55 Nm

- Continuous oxygen sensor
- Check Oxygen Sensor (O2S) and oxygen sensor control before Three Way Catalytic Converter (TWC) ⇒ Page 24-71
- Check aging of oxygen sensor before catalytic converter ⇒ Page 24-83
- Check oxygen sensor heater for Oxygen Sensor (O2S) before Three Way Catalytic Converter (TWC) ⇒ Page 24-99
- Removing and installing ⇒ Page 24-105

cardiagn.com

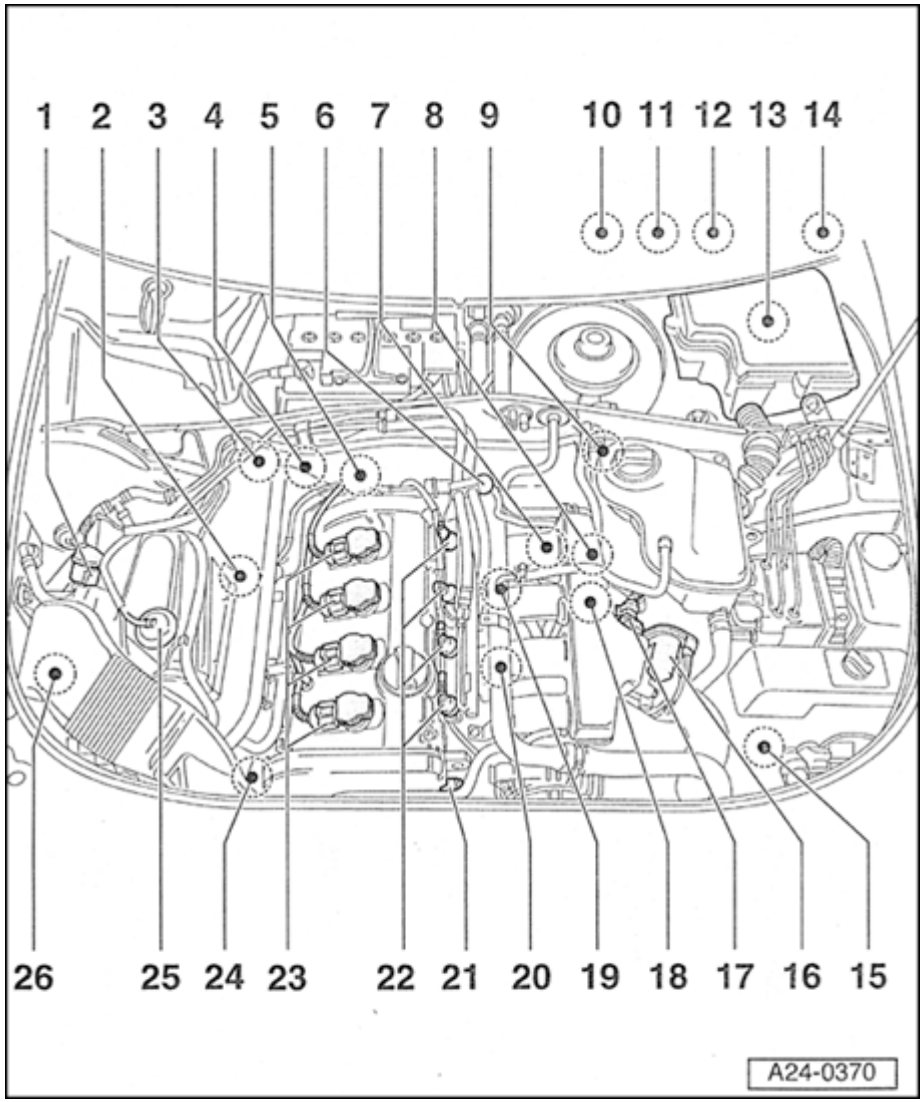

3 - Oxygen Sensor (O2S) behind Three Way Catalytic Converter (TWC) -G130-, 55 Nm

- Check Oxygen Sensor (O2S) and oxygen sensor control behind Three Way Catalytic Converter (TWC) ⇒ Page 24-87
- Check oxygen sensor heater for Oxygen Sensor (O2S) behind Three Way Catalytic Converter (TWC) ⇒ Page 24-99
- Removing and installing ⇒ Page 24-105

4 - Combination valve for secondary air injection (AIR)

- Checking, removing and installing:

⇒ *Repair Manual, 1.8 Liter 4-Cyl. 5V Turbo Engine Mechanical, Engine Code(s): AEB, ATW, Repair Group 26; Secondary Air Injection (AIR) system, checking*

5 - Engine Coolant Temperature (ECT) sensor -G62-

- Checking ⇒ Page 28-30

cardiagn.com

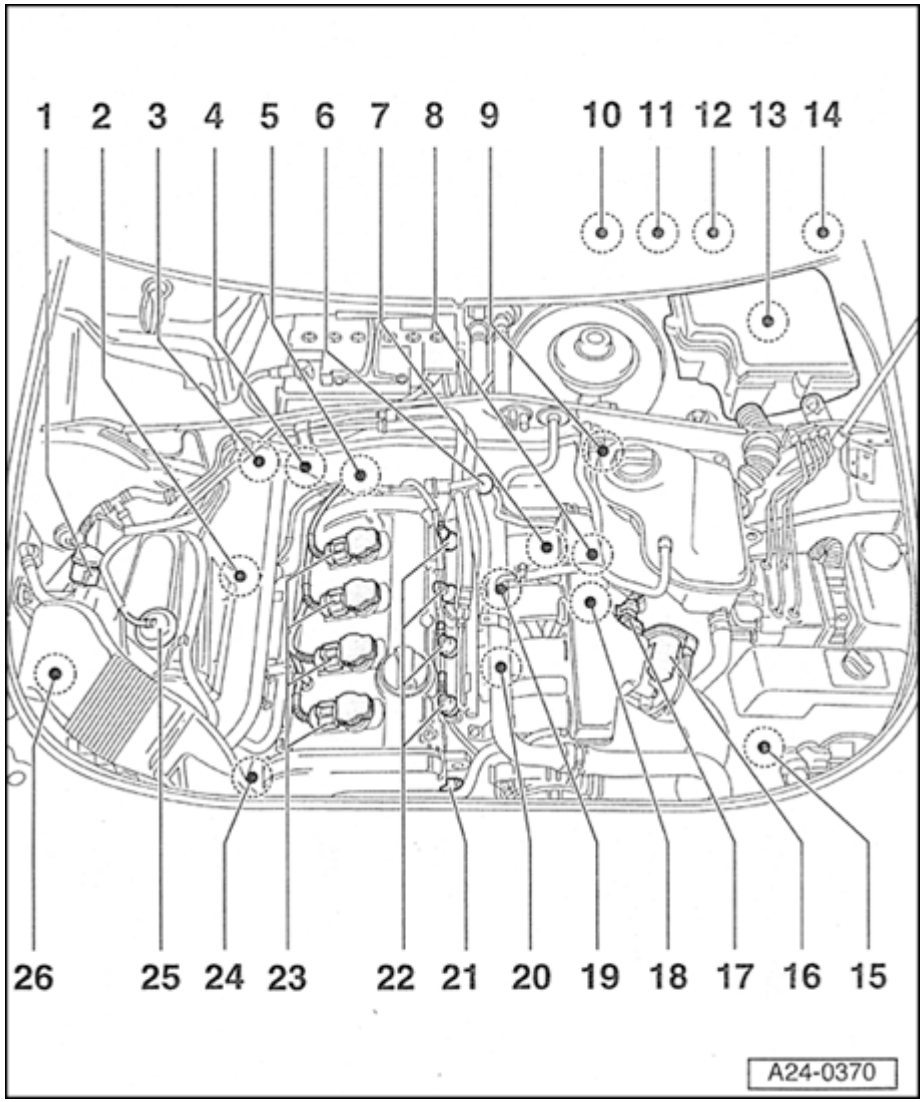

6 - Fuel pressure regulator

- Checking ⇒ Page 24-33

7 - Engine Speed (RPM) sensor -G28-

- Checking ⇒ Page 28-26

8 - Secondary Air Injection (AIR) solenoid valve-N112-

- Installation position ⇒ Page 24-14 , Fig. ⇒ 4
- Checking:

⇒ *Repair Manual, 1.8 Liter 4-Cyl. 5V Turbo Engine Mechanical, Engine Code(s): AEB, ATW, Repair Group 26; Secondary Air Injection (AIR) system, checking*

- Green harness connector

9 - Bracket for harness connectors

- Component location ⇒ Page 24-13 , Fig. ⇒ 1
- Accessible with coolant expansion tank unbolted and swung to the side.

cardiagn.com

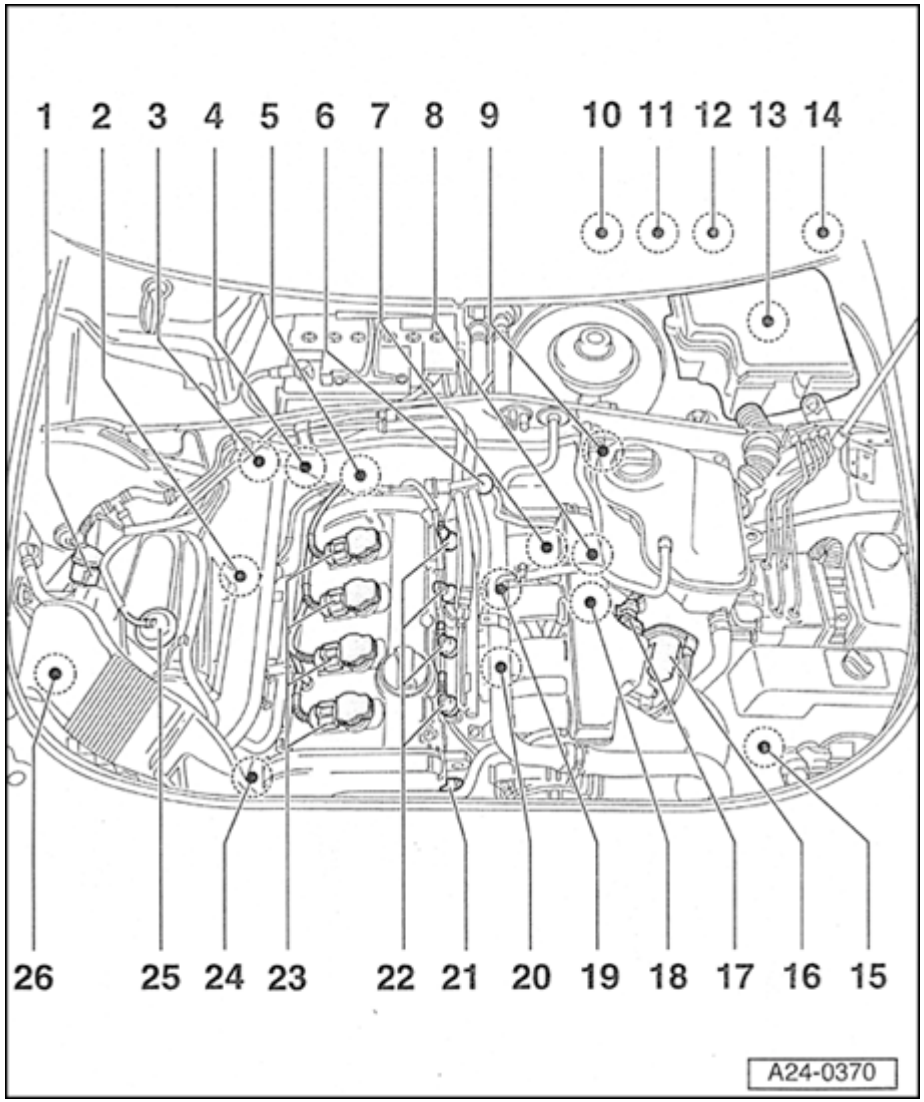

10 - Instrument cluster

- With exhaust Malfunction Indicator Lamp (MIL). Notes for Malfunction Indicator Lamp (MIL) ⇒ Page 01-3
- with fault light for power accelerator activation -K132- (EPC warning lamp). Significance of EPC warning lamp ⇒ Page 24-115

11 - Throttle Position (TP) sensor -G79- and sender 2 for accelerator pedal position -G185-

- Component location ⇒ Page 24-15 , Fig. ⇒ 5
- Checking ⇒ Page 24-133
- Adapt kick down function ⇒ Page 24-139

12 - Brake light switch -F- and brake pedal switch -F47-

- Component location ⇒ Page 24-14 , Fig. ⇒ 3

cardiagn.com

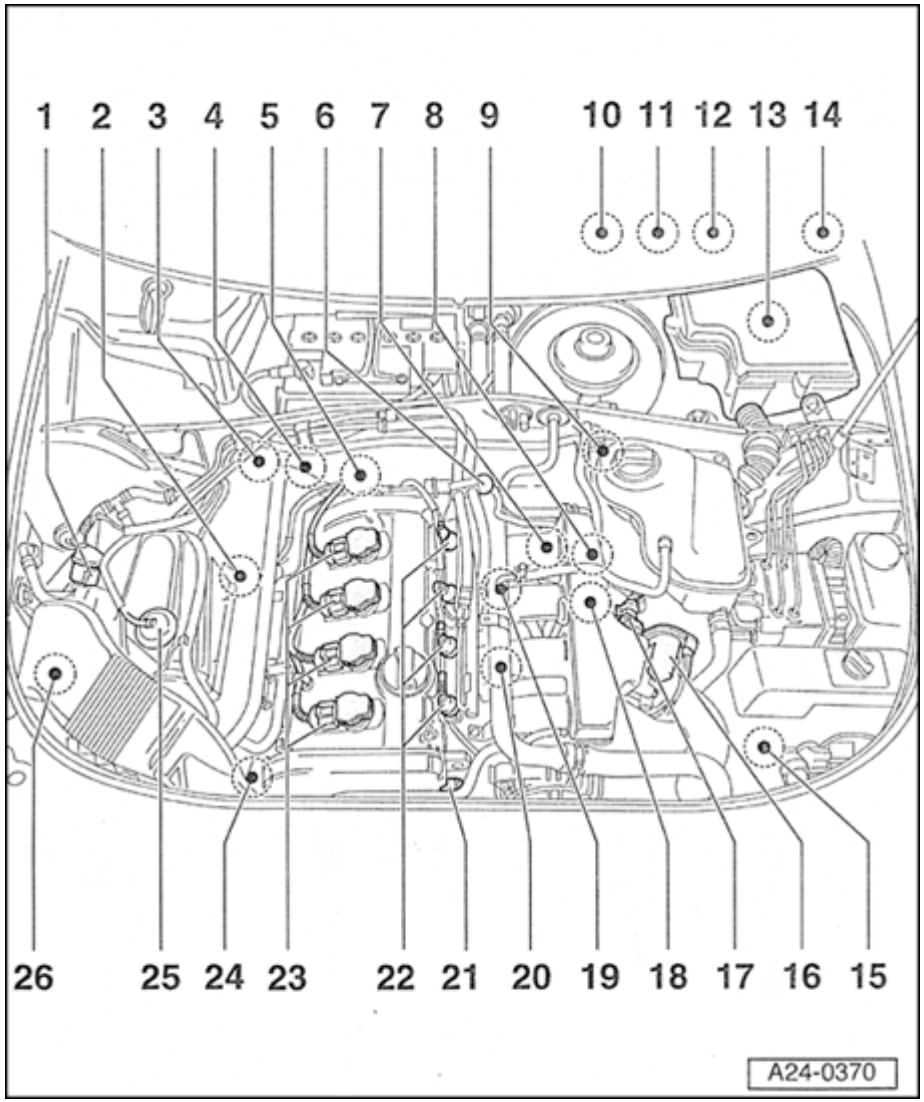

13 - E-box, plenum chamber

- Installation locations ⇒ Page 24-15 , Fig. ⇒ 6
- Installation location for motronic Engine Control Module (ECM) -J220- with integrated Barometric pressure (BARO) sensor -F96-
- Check voltage supply of Engine Control Module (ECM) ⇒ Page 28-36
- Procedure to follow after open circuit in voltage supply ⇒ Page 24-22
- Replacing Engine Control Module (ECM) ⇒ Page 24-23
- Installation location of Secondary Air Injection (AIR) pump relay -J299-
- Check Secondary Air Injection (AIR) pump relay -J299-:

⇒ *Repair Manual, 1.8 Liter 4-Cyl. 5V Turbo Engine Mechanical, Engine Code(s): AEB, ATW, Repair Group 26; Secondary Air Injection (AIR) system, checking*

cardiagn.com

24-10

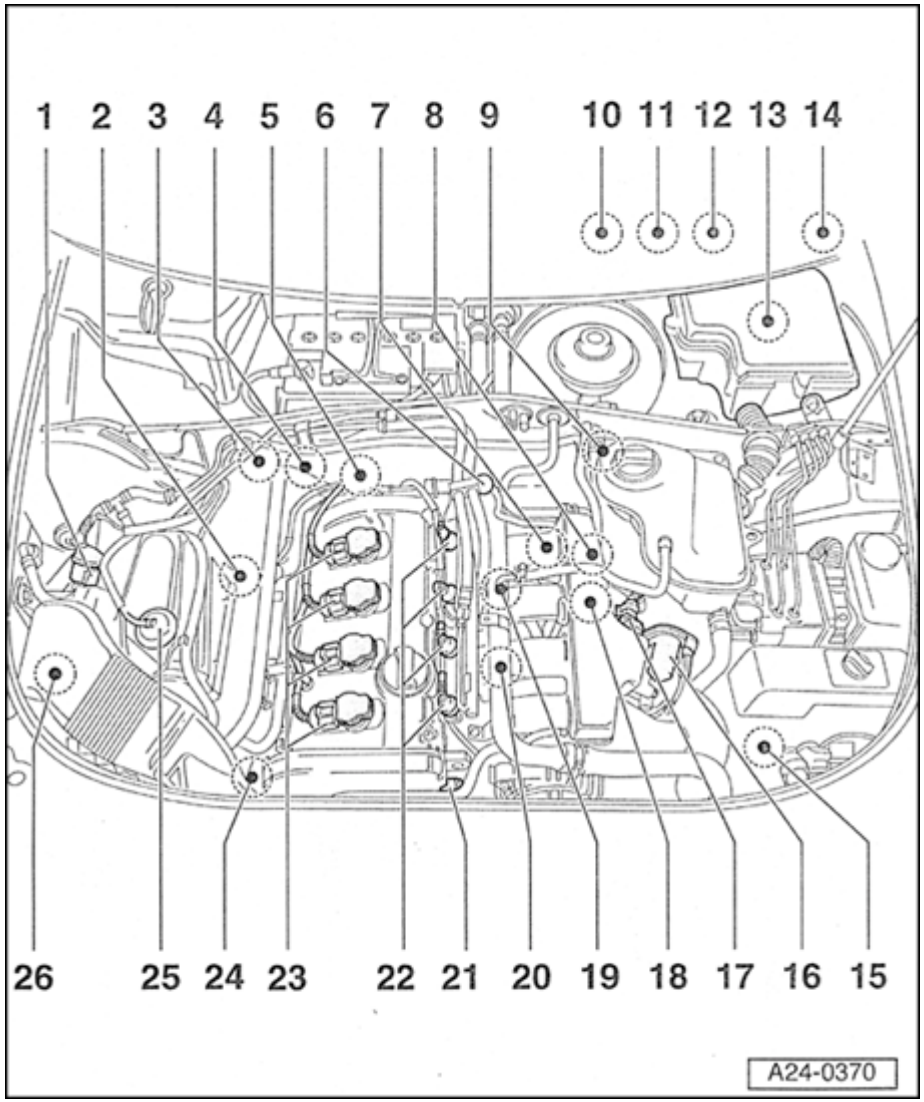

- Installation location of motronic Engine Control Module (ECM) power supply relay -J271-
- Check motronic Engine Control Module (ECM) power supply relay -J271- ⇒ Page 28-13
- Installation location of fuse S130 for Secondary Air Injection (AIR) pump

14 - Clutch vacuum vent valve switch -F36-

- Component location ⇒ Page 24-14 , Fig. ⇒ 3

15 - Charge air pressure sensor -G31-

- Installation position ⇒ Page 24-16 , Fig. ⇒ 7
- Checking:

⇒ *Repair Manual, 1.8 Liter 4-Cyl. 5V Turbo Engine Mechanical, Engine Code(s): AEB, ATW, Repair Group 21, Charge air system with turbocharger, checking*

cardiagn.com

24-11

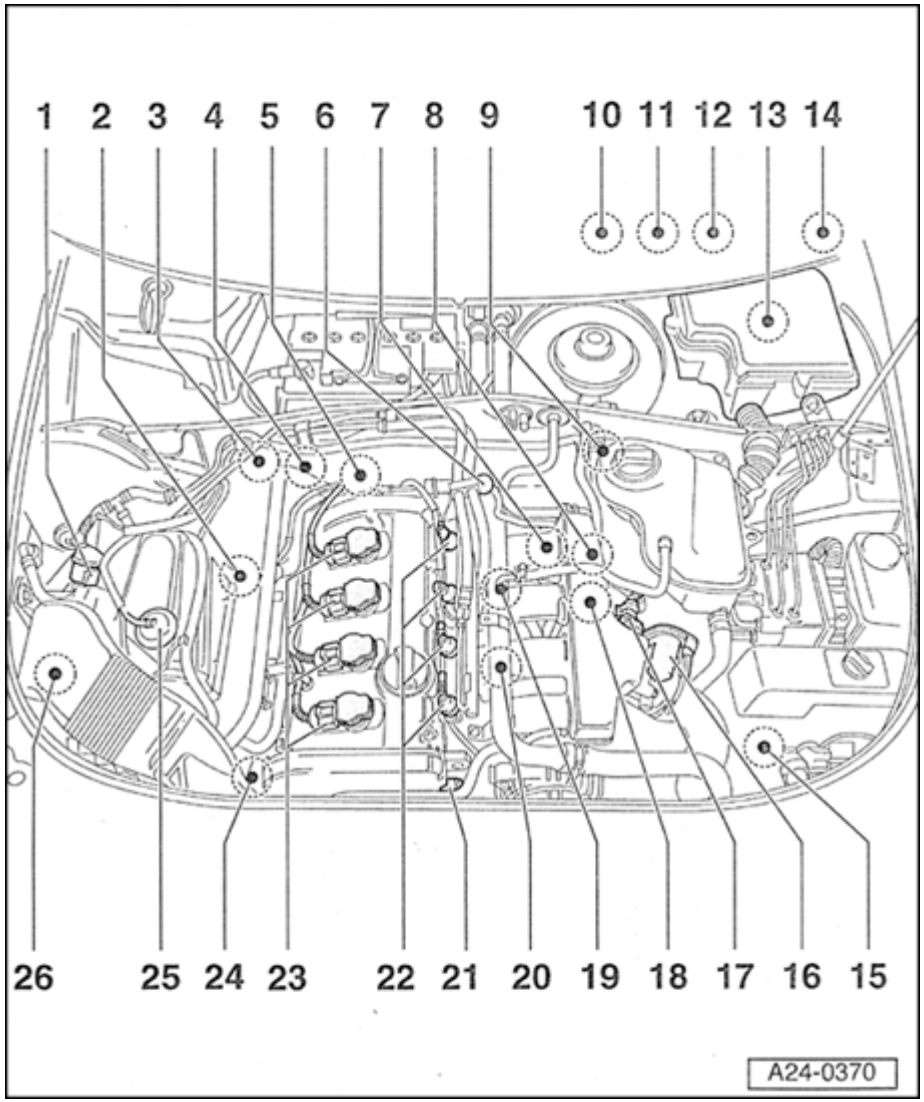

16 - Throttle valve control module -J338-

- With throttle drive (power accelerator actuation) -G186-, angle sensor -1- for throttle drive (power accelerator actuation) -G187-, and angle sensor -2- for throttle drive (power accelerator actuation) -G188-
- Checking ⇒ Page 24-120

17 - Intake Air Temperature (IAT) sensor -G42-

- Checking ⇒ Page 28-21

18 - Recirculating valve for turbocharger- N249-

- Installation position ⇒ Page 24-14 , Fig. ⇒ 4
- Blue harness connector

19 - Knock Sensor (KS) 1 -G61-

20 - Knock Sensor (KS) 2 -G66-

21 - Camshaft Position (CMP) sensor 2 -G40-

- Checking ⇒ Page 28-45

cardiagn.com

24-12

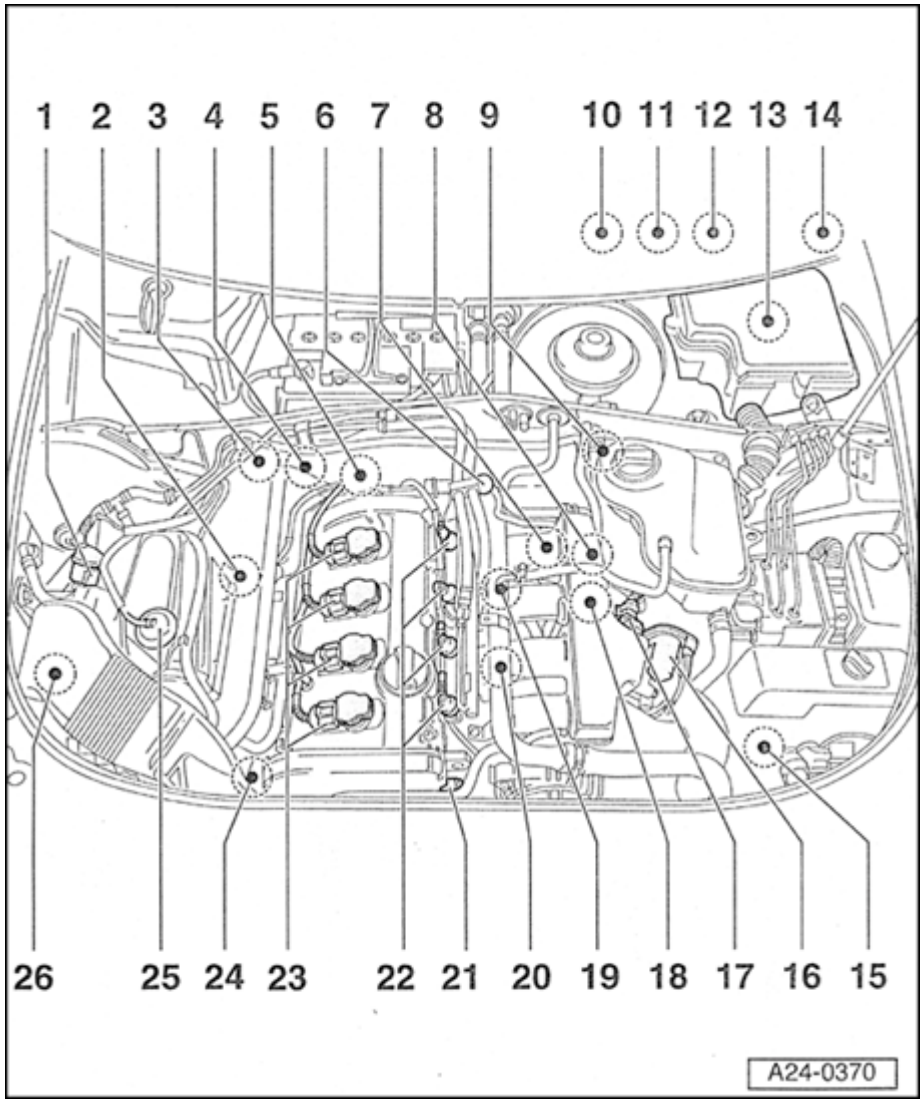

22 - Fuel injectors -N30- through -N33-

- Checking ⇒ Page 24-38
- Removing and installing ⇒ Page 24-46

23 - Ignition coils -N-, -N128-, -N158-, -N163-

- Checking ⇒ Page 28-4

24 - Wastegate bypass regulator valve -N75-

- Checking:

⇒ *Repair Manual, 1.8 Liter 4-Cyl. 5V Turbo Engine Mechanical, Engine Code(s): AEB, ATW, Repair Group 21, Charge air system with turbocharger, checking*

25 - Mass Air Flow (MAF) sensor -G70-

- Checking ⇒ Page 24-60

26 - Secondary Air Injection (AIR) pump motor-V101-

- Checking:

⇒ *Repair Manual, 1.8 Liter 4-Cyl. 5V Turbo Engine Mechanical, Engine Code(s): AEB, ATW, Repair Group 26; Secondary Air Injection (AIR) system, checking*

cardiagn.com

24-13

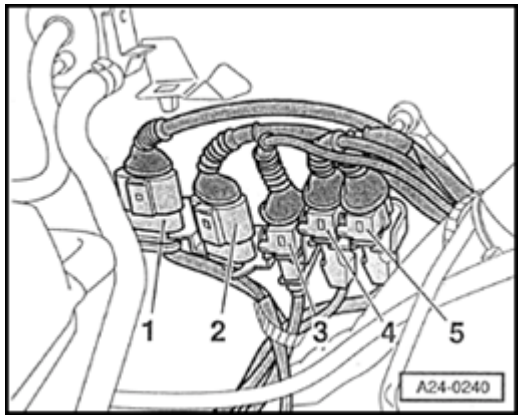

Fig. 1 Installation location, harness connectors

The following harness connectors are located below the coolant expansion tank:

1 - 4-pin harness connector, brown

for Oxygen Sensor (O2S) behind Three Way Catalytic Converter (TWC) -G130- and Oxygen Sensor (O2S) Heater 1 -Z29- (bank 1 sensor 2)

2 - 6-pin harness connector, black

for Heated Oxygen Sensor (HO2S) -G39- before catalytic converter and Oxygen Sensor (O2S) Heater -Z19- (bank 1 sensor 1)

3 - 3-pin harness connector, gray

for Engine Speed (RPM) sensor -G28-

4 - 3-pin harness connector, blue

for Knock Sensor (KS) 2 -G66-

5 - 3-pin harness connector, green

for Knock Sensor (KS) 1 -G61-

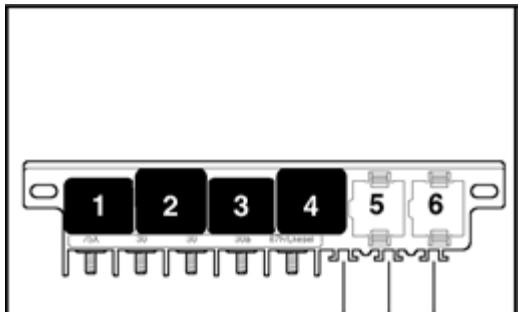

Fig. 2 Component locations Fuel Pump (FP) Relay -J17-

Fuel Pump (FP) Relay -J17- is located at position 4 of central electrics in driver's footwell, left.

cardiagn.com

24-14

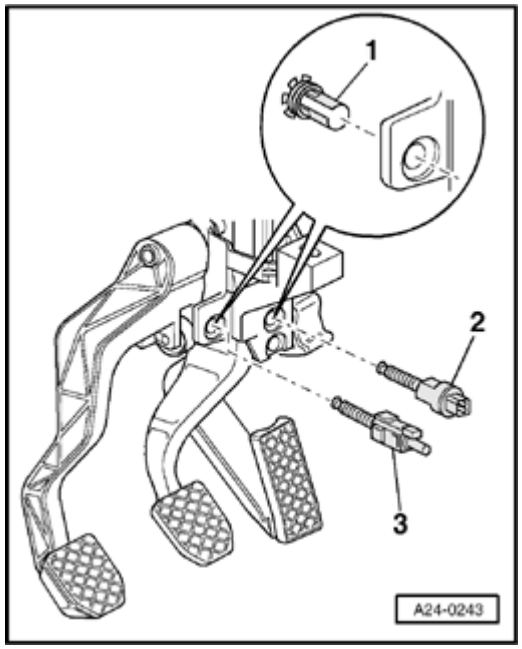

Fig. 3 Installation location of brake light switch -F- and brake pedal switch -F47-, clutch vacuum vent valve switch -F36-

1 - Clip

2 - Clutch vacuum vent valve switch -F36-

3 - Brake light switch -F-, brake pedal switch -F47-

Note:

In order to assure sufficiently secure fitting, switches must not be installed more than once.

Adjusting switch:

⇒ *Repair Manual, Brake System, Repair Group 46, Brake booster, removing and installing*

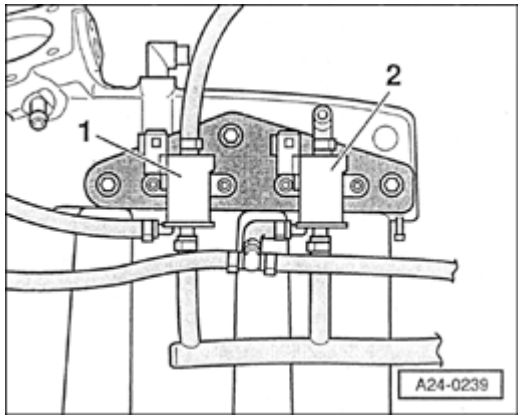

Fig. 4 Installation location of Secondary Air Injection (AIR) solenoid valve-N112- and recirculating valve for turbocharger-N249-

- Installation location: Below intake manifold

1 - Recirculating valve for turbocharger -N249-

2 - Secondary Air Injection (AIR) solenoid valve -N112-

Note:

Illustration depicts intake manifold removed, from below.

cardiagn.com

24-15

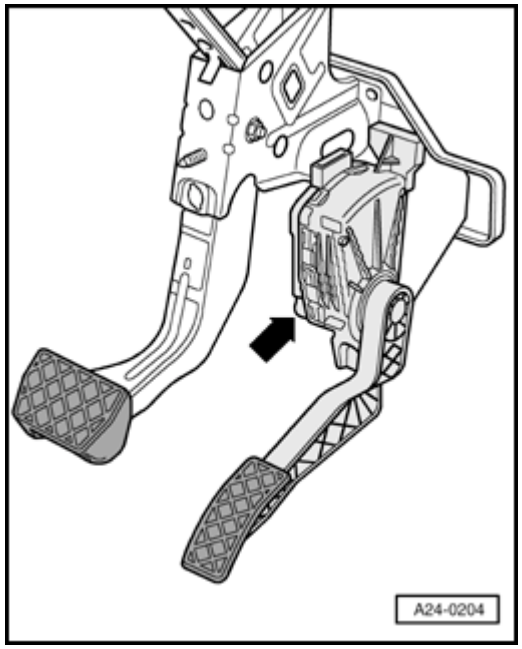

Fig. 5 Installation position, Throttle Position (TP) sensor -G79- and sender 2 for accelerator pedal position -G185-

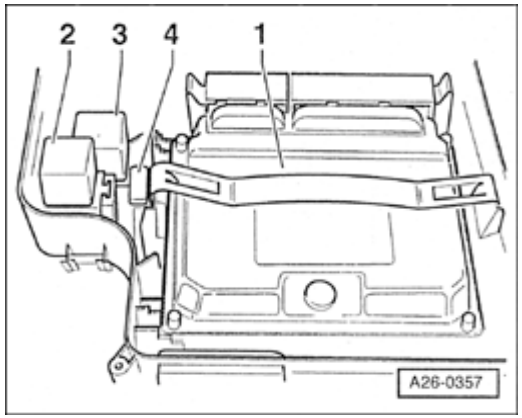

Fig. 6 Installation positions in E-box, plenum chamber

1 - Engine Control Module (ECM)

2 - Secondary Air Injection (AIR) pump relay -J299-

3 - Motronic Engine Control Module (ECM) power supply relay -J271-

4 - Installation location of fuse S130 for Secondary Air Injection (AIR) pump

cardiagn.com

24-16

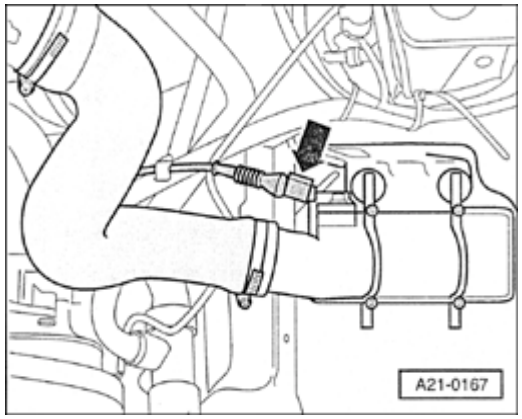

Fig. 7 Installation location, charge air pressure sensor -G31-

Charge air pressure sensor -G31- (arrow) bolted into charge air cooler at top

cardiagn.com

24-17

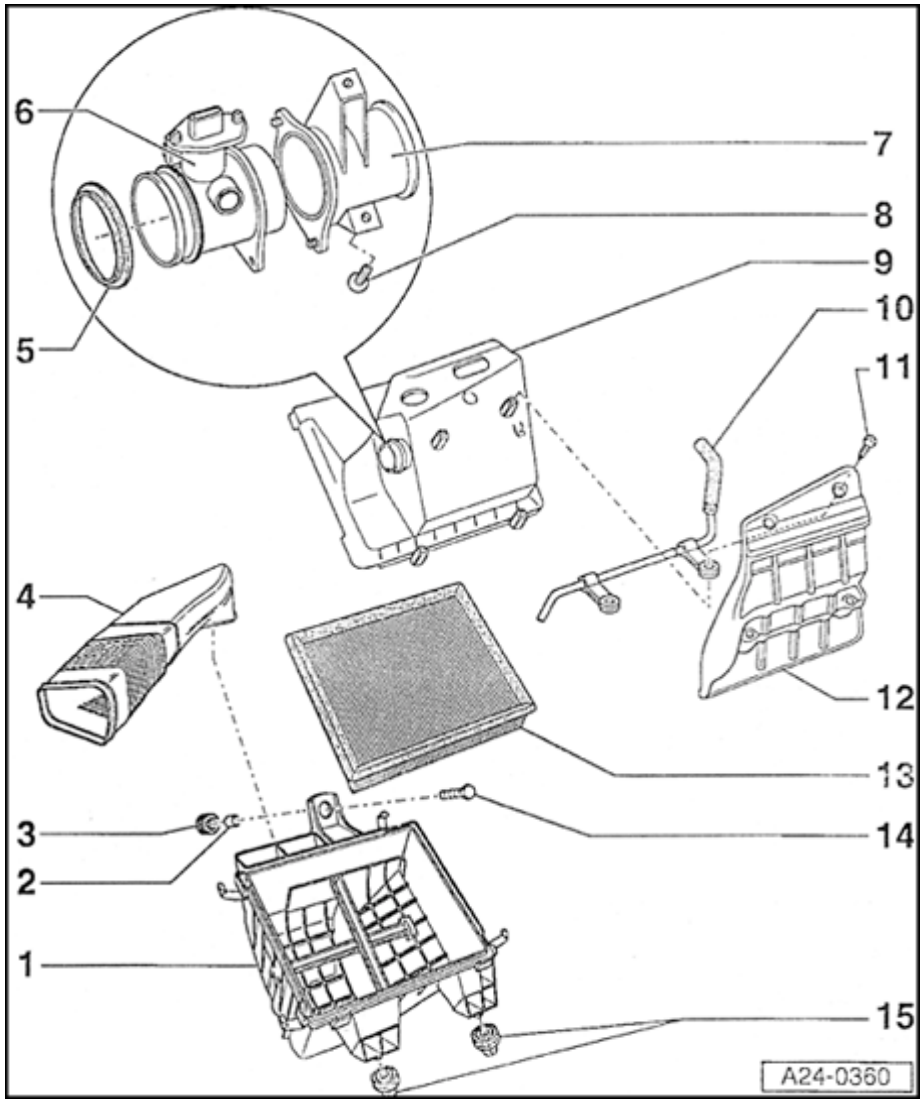

Air cleaner, disassembling and assembling

1 - Lower part of air cleaner housing

2 - Sleeve

3 - Rubber grommet

4 - Air duct

- to metering unit

5 - Seal

6 - Mass Air Flow (MAF) sensor -G70-

- Checking ⇒ Page 24-60

7 - Air duct

8 - 6 Nm

9 - Upper part of air cleaner housing

cardiagn.com

24-18

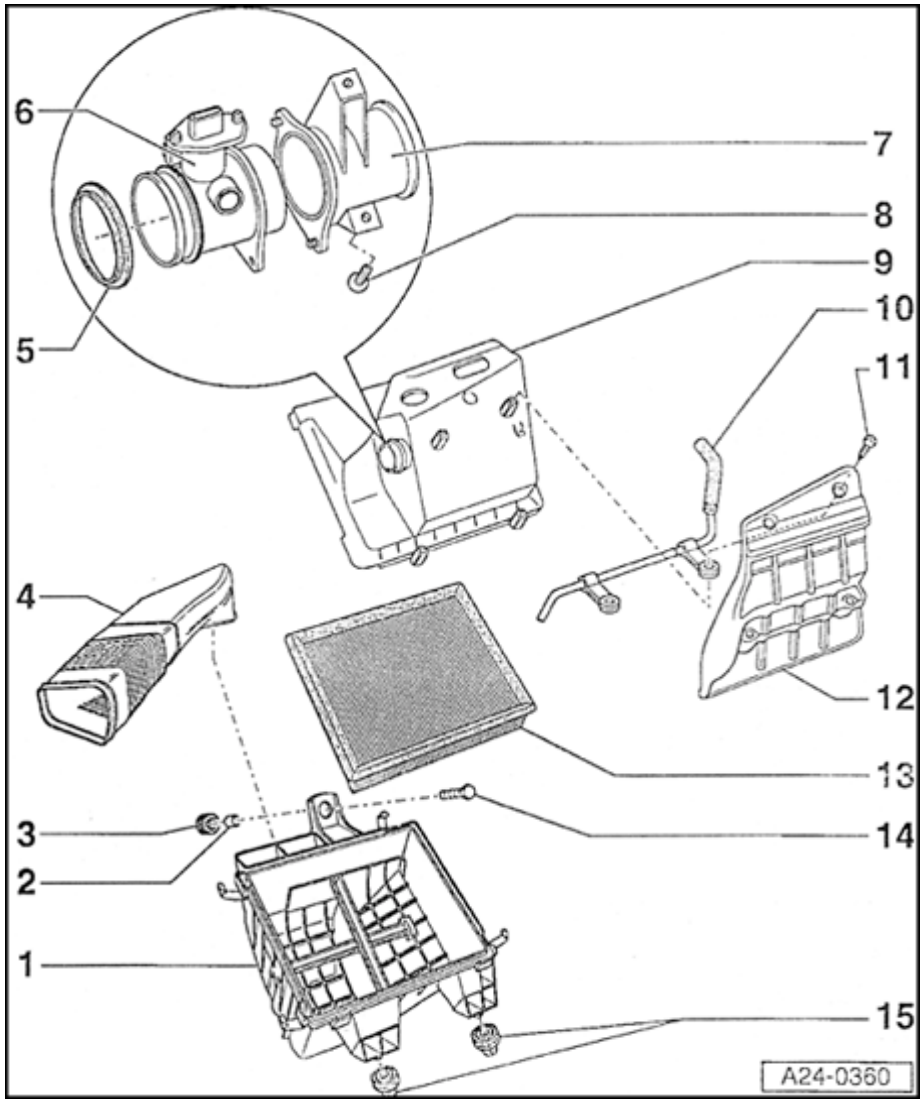

10 - Wire

- For EVAP canister system

11 - 10 Nm

12 - Heat shield

13 - Filter element

- Follow filter change intervals

⇒ *Repair Manual, Maintenance*

14 - 10 Nm

15 - Rubber grommet

cardiagn.com

24-19

Wiring and component testing using VAG1598/31 test box

Note:

- *VAG1598/31 test box is designed so that it can be simultaneously connected to the wiring harness at the Engine Control Module (ECM) and also to the ECM itself.*
- *This is advantageous because electronic engine control remains fully functional (e.g. measurement of signals with engine running) when the test box is attached.*
- *Relevant test procedures note whether Engine Control Module (ECM) should also be connected to the test box or not.*
- *Always use VAG1594A connector test kit to attach measurement devices (e.g. VAG1527B voltage tester, VAG1526 multimeter etc.).*

WARNING!

To avoid damaging electronic components, set measuring range before connecting test leads and observe all test requirements.

cardiagn.com

24-20

Special tools and equipment

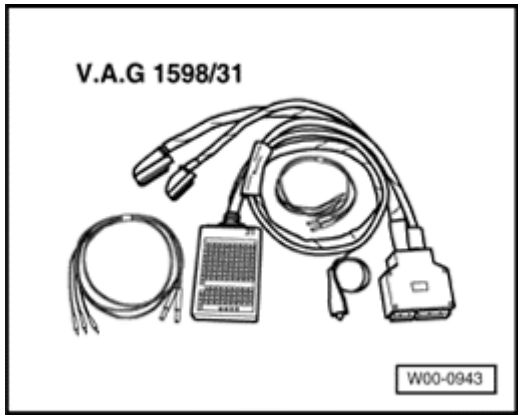

- VAG1598/31

Procedure

- Switch ignition off.
- Remove Engine Control Module (ECM) ⇒ Page 24-23 .

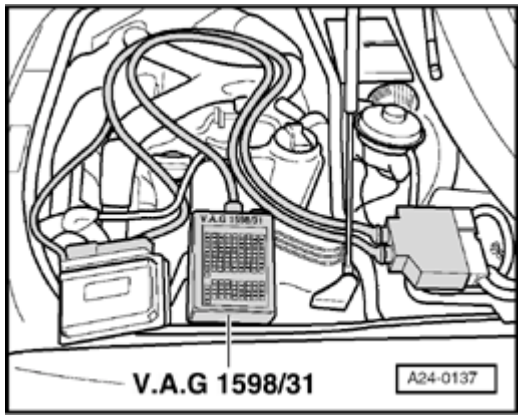

- Connect VAG1598/31 test box to connector of wiring harness. Ground (GND) clip at test box (not visible in illustration) must be connected to Ground (GND). Relevant test procedures note whether Engine Control Module (ECM) should also be connected to the test box.
- Perform test as described in relevant repair sequence.

cardiagn.com

24-21

Note:

Important note:

After re-connecting the Engine Control Module (ECM), the following work steps must be performed:

- Perform adaptation of the Throttle Valve Control Module -J338- ⇒ Page 24-121 .

- For vehicles with automatic transmission, the kick down function must be adapted ⇒ Page 24-139 .

- Check DTC memory and erase it if necessary ⇒ Page 01-16 .

- If DTC memory was erased, readiness code must be re-generated ⇒ Page 01-73 .

Note:

During the first adaptation phase, it is possible that idle will be rough and vehicle may shake lightly in drive mode.

cardiagn.com

24-22

Procedure following interruption of voltage supply

Note:

Important note:

After re-connecting voltage supply, the following work steps must be performed:

- Perform adaptation of the Throttle Valve Control Module -J338- ⇒ Page 24-121 .

- For vehicles with automatic transmission, the kick down function must be adapted ⇒ Page 24-139 .

- Check DTC memory and erase it if necessary ⇒ Page 01-16 .

- If DTC memory was erased, readiness code must be re-generated ⇒ Page 01-73 .

Note:

During the first adaptation phase, it is possible that idle will be rough and vehicle may shake lightly in drive mode.

cardiagn.com

24-23

Engine Control Module (ECM), replacing

Special tools and equipment

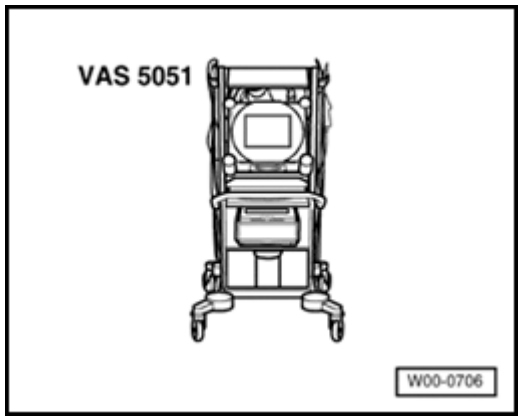

- VAS5051 with VAG5051/1

or

- VAG1551 with VAG1551/3A

Removing

- Connect VAS5051 tester or VAG1551 scan tool and select control module for engine electronics using "address word" 01 ⇒ Page 01-10 . Ignition must remain switched on.

4B0906018Q	1.8 L R4/5VT G 0008 →	
Coding 07551		WSC 12345

VAG1551 Scan Tool (ST) display indicates control module identification, e.g.

- Always allow display of control module identification first and print it out ⇒ Page 01-13 .
- Compare coding with coding versions ⇒ Page 01-64 .

cardiagn.com

24-24

- Switch ignition off.

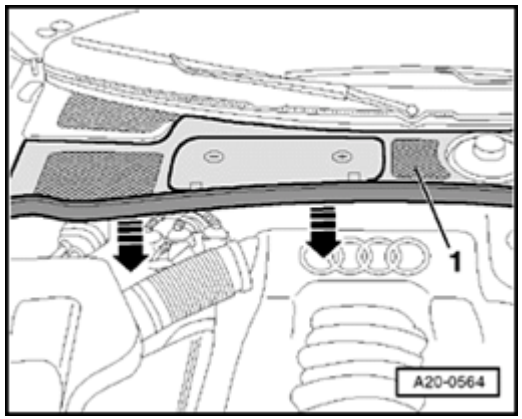

- Pull off rubber seal of plenum chamber cover in direction of arrow.
- Remove cover -1- toward front.

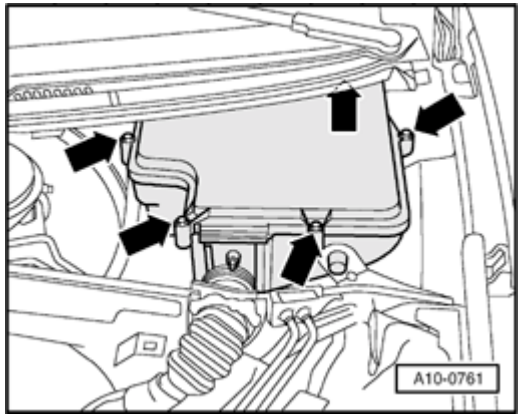

- Remove Heater Core E-box cover (arrows).

cardiagn.com

24-25

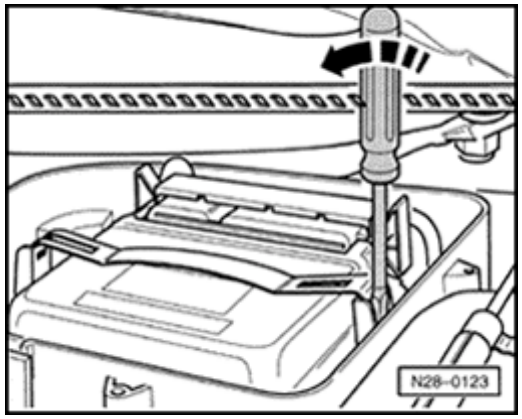

- Using a screwdriver, carefully pry off retaining bracket (arrow).

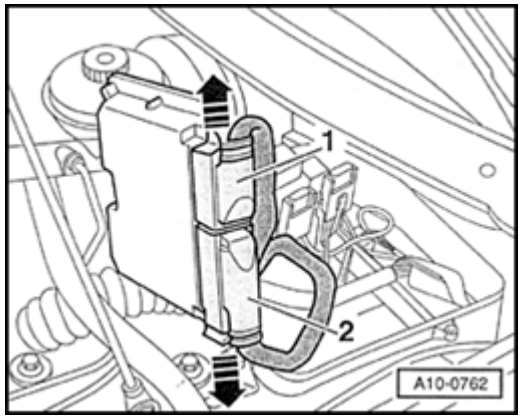

- Disengage connector catches (arrows) and disconnect harness connectors -1- and -2- from control module.

Note:

Adaptation values are erased when connector is disconnected from the Engine Control Module (ECM), DTC memory content remains intact.

- Remove Engine Control Module (ECM).

cardiagn.com

24-26

Installing

Installation is reverse of removal, noting the following:

Note:

Important note:

After installing new Engine Control Module (ECM), the following work steps must be performed:

- Check DTC memory and erase it if necessary ⇒ Page 01-16 .

- Perform adaptation of the Throttle Valve Control Module -J338- ⇒ Page 24-121 .

- Observe notes for coding new Engine Control Module (ECM) ⇒ Page 01-62 .

- For vehicles with cruise control (discernable at steering column), switch this free in ECM:

⇒ Repair Manual, Electrical Equipment On Board Diagnostic (OBD), Repair Group 01; OBD for cruise control system

- For vehicles with automatic transmission, the kick down function must be adapted ⇒ Page 24-

cardiagn.com

139 .

cardiagn.com

24-27

- Adapt immobilizer to Engine Control Module (ECM):

⇒ Repair Manual, Electrical Equipment On Board Diagnostic (OBD), Repair Group 01; OBD of immobilizer - variable code; adaptation after replacing Engine Control Module (ECM)

- Generate readiness code ⇒ Page 01-73 .

Note:

During the first adaptation phase, it is possible that idle will be rough and vehicle may shake lightly in drive mode.

cardiagn.com

24-28

Idle speed (RPM), checking

Special tools and equipment

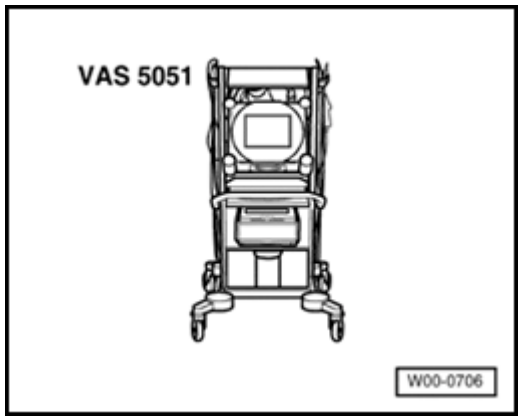

- VAS5051 with VAG5051/1

or

- VAG1551 with VAG1551/3A

Test requirements:

- Exhaust system free of leaks.
- Coolant Temperature at least 80 °C.
- Electrical consumers switched off (radiator fan must NOT run during test).
- A/C switched off.
- No pressure gauge connected.
- Vehicles with automatic transmission Selector lever in P or N.

cardiagn.com

24-29

Note:

- *Idle speed cannot be adjusted.*
- *Idle speed is checked during basic setting of the engine.*
- *During basic setting, the Evaporative Emission (EVAP) canister purge regulator valve (EVAP valve -N80-) is closed and the A/C compressor is switched off*

Test sequence

- Check DTC memory ⇒ Page 01-16 . There must not be any DTCs stored, repair malfunctions if necessary, erase DTC memory, switch engine off and start again, road test vehicle and check DTC memory again as a control measure.

- Let engine continue to run at idle.

WARNING!

The electric fan for the radiator must not be running.

Rapid data transfer	**HELP**
Select function XX	

When indicated on display

- Press buttons -0- and -4- to select "Initiate basic setting" and press -Q-

cardiagn.com

button to confirm input.

cardiagn.com

24-30

Basic Setting **Q**

Enter display group number XXX

When indicated on display

- Press buttons -0-, -5- and -6- to select "display group number 056" and press -Q- button to confirm input.

System in basic setting 56 →

1 2 3 4

When indicated on display

- Check whether the engine speed in display field 1 (actual engine speed) is within tolerated range.

	Display fields			
	1	2	3	4
Display group 056: Idle stabilization at operating temperature				
Display	**xxx /min**	**xxx /min**	x.x %	X X X X X
Indicated	**Engine speed (actual)**	**Engine speed (specified)**	Idle control Torque change	Operating conditions
Specified value	**FWD: 740 to 860 RPM** **AWD: 800 to 920 RPM**	**FWD: 800 RPM** **AWD: 860 RPM**	x.x %	0 0 0 0 0
Note	**If specified value is not obtained** ⇒ **Page 24-32**			Significance of numbers ⇒ Page 24-32

cardiagn.com

24-31

Note:

- *Engine speed in display field 1 (actual engine speed) is the current engine speed.*
- *Engine speed in display field 2 (specified engine speed) is a theoretical engine speed calculated by the ECM.*
- *At idle, the ECM always attempts to adapt the engine speed (actual) to the specified engine speed (specified).*
- *This means that the engine speed (actual) must always approximately match the engine speed (specified) at idle.*
- *Display fields 3 and 4 provide information, but are not relevant for checking idle speed.*

If specified value is obtained:

- Press → button.

Rapid data transfer	**HELP**
Select function XX	

Indicated on display (function selection):

If specified value is not obtained:

- Check DTC memory again ⇒ Page 01-16 .

cardiagn.com

- If DTC memory was erased, readiness code must be re-generated ⇒ Page 01-73 .

cardiagn.com

If idle speed is too high or low and there are no DTCs in DTC memory, the following tests (marked with dots) must be performed:

- Check for false air in intake air system ⇒ Page 24-68 .
- Check throttle valve control module ⇒ Page 24-120 .
- Evaporative Emission (EVAP) canister purge regulator valve always open, checking ⇒ Page 24-107 .
- Perform adaptation of throttle valve control module ⇒ Page 24-121 .

Significance of 5 digit indication of display group 056

x	x	x	x	x	Display field 4
				0	A/C compressor: 0 = A/C compressor off; 1 = A/C compressor on
			0		Manual transmission: Indication always 0 Driving mode for automatic transmission: 0 = selector lever in P or N; 1 = selector lever in 2/3/4/D/R
		0			Indication always 0
	0				Indication always 0
0					Indication always 0

cardiagn.com

24-33

System pressure, fuel pressure regulator and residual pressure, checking

Note:

Fuel pressure regulator regulates fuel pressure according to intake manifold pressure. This ensures that the pressure drop at the fuel injectors remains the same for each speed and load range of the engine.

Special tools and equipment

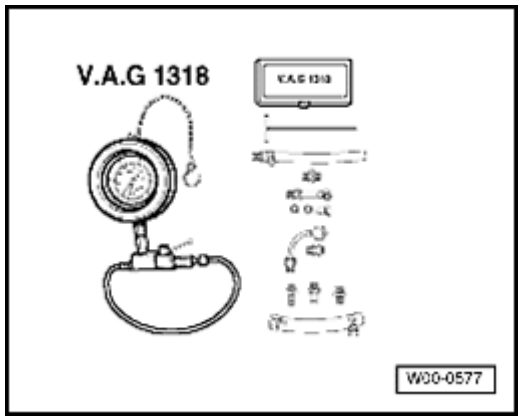

- VAG1318
- V.A.G 1318 with V.A.G 1318/11 adapter, V.A.G 1318/12 pressure hose with connectors and V.A.G 1318/13 adapter

Test requirements:

- Fuel Pump (FP) relay OK; checking ⇒ Page 24-53 .
- Fuel Pump (FP) OK, checking:

⇒ *Repair Manual, Fuel Supply System, Repair Group 20*

- Fuel filter OK
- Battery voltage at least 12.7 V
- Vehicles with automatic transmission Selector lever in P or N.

cardiagn.com

24-34

Checking system pressure

- Open fuel filler flap briefly (pressure release).

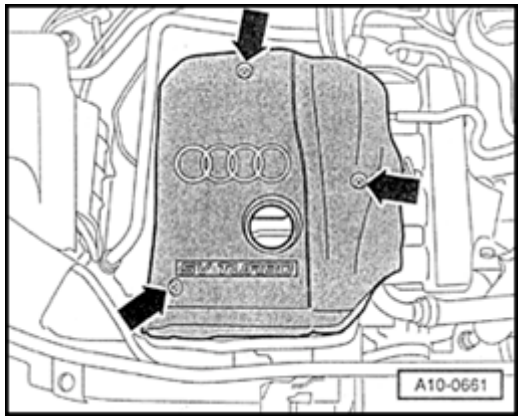

- Remove engine cover (arrows).

WARNING!

Fuel system is under pressure! Before opening system, place rags around the connection point. Then release pressure by carefully loosening connection.

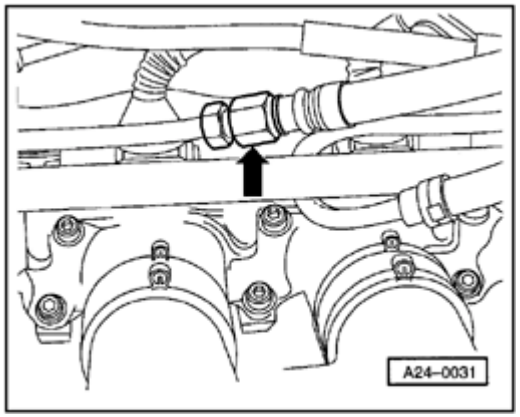

- Open threaded connection (arrow) and catch exiting fuel using a rag.
- Connect VAG1318 pressure gauge in supply line using adapters 1318/11, 1318/12 and 1318/13.

cardiagn.com

24-35

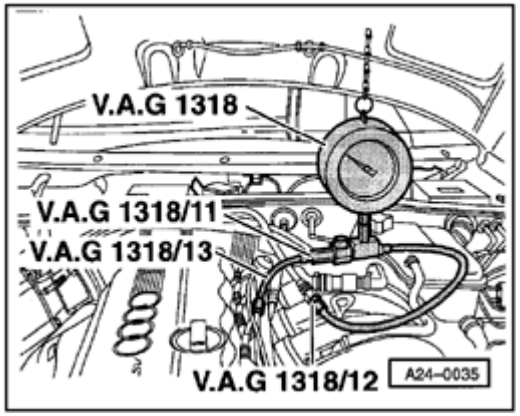

- Open shut-off valve of pressure gauge. The lever points in the direction of flow.
- Start engine and let run at idle.
- Measure fuel pressure.
  - ♦ Specification: about 3.5 bar positive pressure

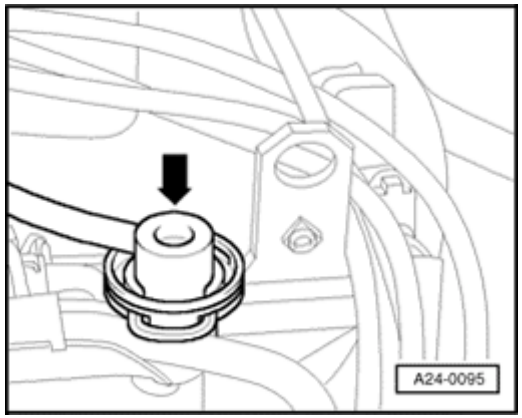

- Disconnect vacuum hose at fuel pressure regulator.
  - ♦ Fuel pressure must rise to about 4.0 bar positive pressure.
- Switch ignition off.
- Check for proper seal and residual pressure by observing pressure drop on pressure gauge.
  - ♦ After 10 minutes, there must be at least 2.5 bar positive pressure

cardiagn.com

24-36

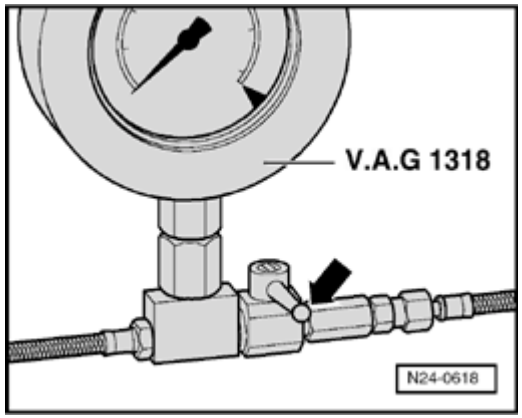

If residual pressure sinks below 2.5 bar positive pressure:

- Start engine and let run at idle.

- Wait until pressure has dropped, and then switch off ignition. Simultaneously close shut-off valve of VAG1318 pressure gauge (lever perpendicular to direction of flow -arrow-).
- Observe pressure drop on pressure gauge.

If pressure does not drop now:

- Test check-valve on Fuel Pump (FP).

If pressure drops again:

- Open shut-off valve of pressure gauge. The lever points in the direction of flow.
- Start engine and let run at idle.
- Wait until pressure has dropped, and then switch off ignition. Simultaneously clamp return line (with blue marking) completely closed.

If pressure does not drop now:

- Replace fuel pressure regulator

cardiagn.com

24-37

If pressure drops again:

- Check wire connections, O-rings at fuel distributor and fuel injectors for proper seal.

- Check whether pressure gauge is properly sealed.

Note:

Before disconnecting pressure gauge, release pressure by opening shut-off valve. Hold a container in front of connection for this.

cardiagn.com

24-38

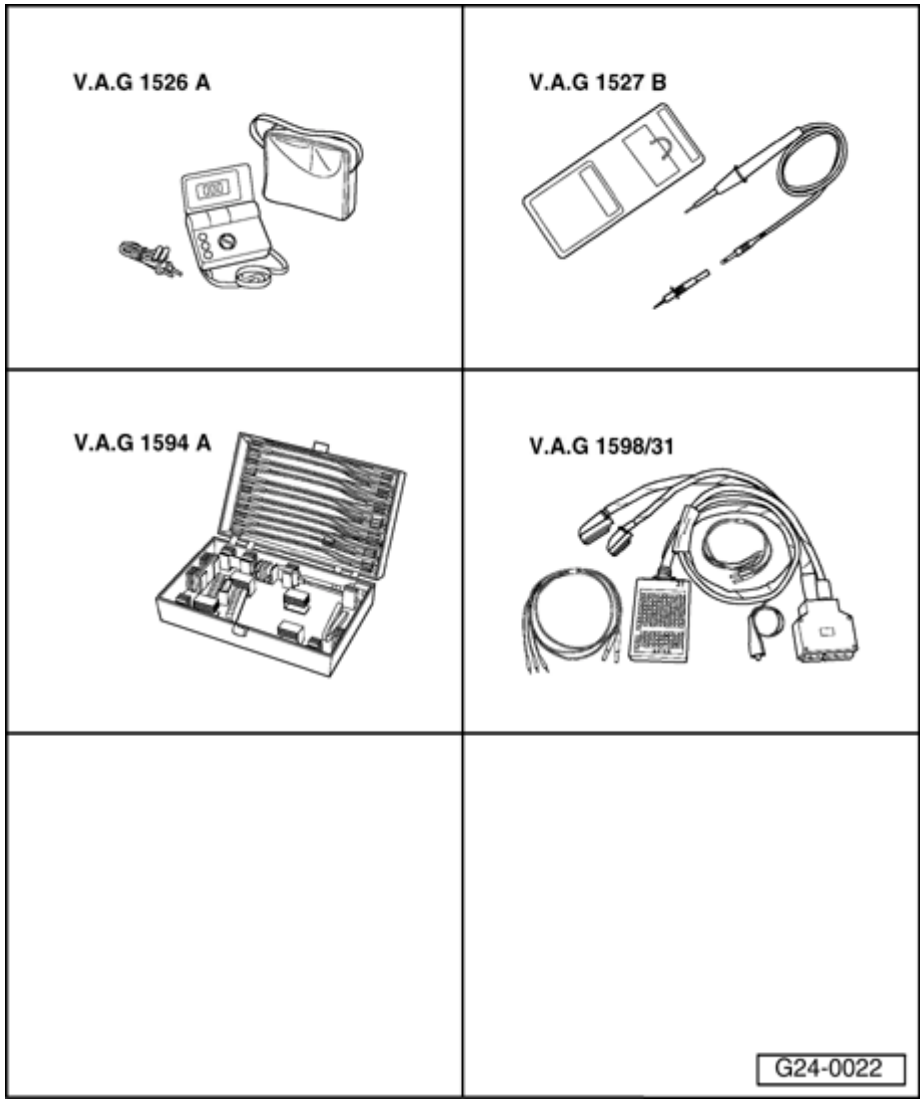

Fuel injectors, checking

Special tools and equipment

- VAG1526A
- VAG1527B
- VAG1594A
- VAG1598/31

cardiagn.com

24-39

Checking internal resistance

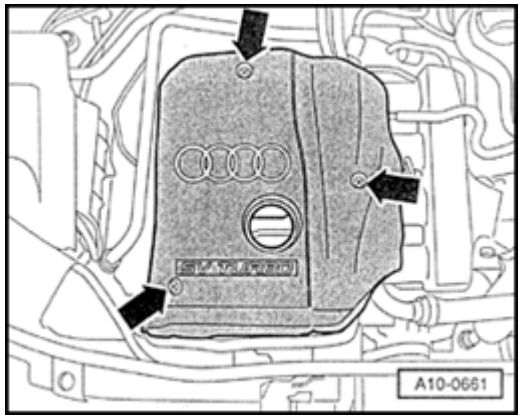

- Remove engine cover (arrows).
- Disconnect harness connector at the fuel injector to be tested.

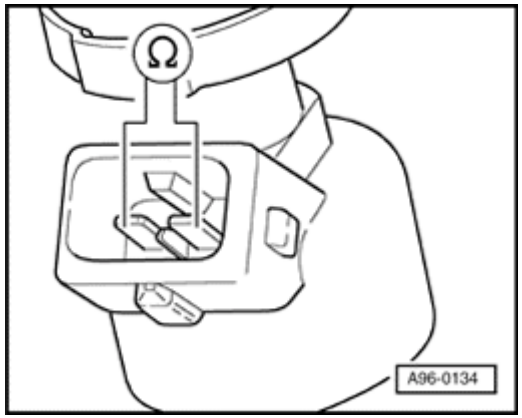

- Connect multimeter at valve for resistance measurement.
  - Specification: 12 to 13 Ω (at room temperature)

If specified value is not obtained:

- Replace fuel injector.

If specified value is obtained:

- Check voltage supply

cardiagn.com

24-40

Checking voltage supply

Test requirements:

- Fuse for fuel injectors OK

⇒ *Electrical Wiring Diagrams, Troubleshooting & Component Locations*

- Fuel Pump (FP) relay OK; checking ⇒ Page 24-53 .

- Disconnect harness connector at the fuel injector to be tested.

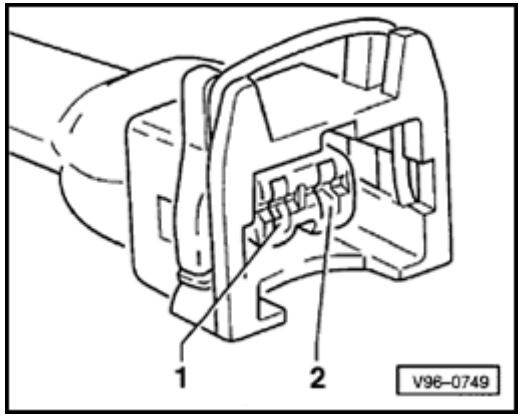

- Connect VAG1527B voltage tester as follows:

Harness connector Terminal	Measure to
1	Engine Ground (GND)

- Switch ignition on.
  - ♦ LED must light up.

If LED does not light up:

cardiagn.com

- Check wire connection between terminal 1 and fuse for injector valves for open circuit:

⇒ *Electrical Wiring Diagrams, Troubleshooting & Component Locations*

cardiagn.com

24-41

- Repair open circuit if necessary.

If LED lights up:

- Activation of fuel injectors, checking

Checking activation

Test requirement:

- Internal resistance of valve OK

- Slide back rubber grommet of fuel injector connector, but leave connector connected.

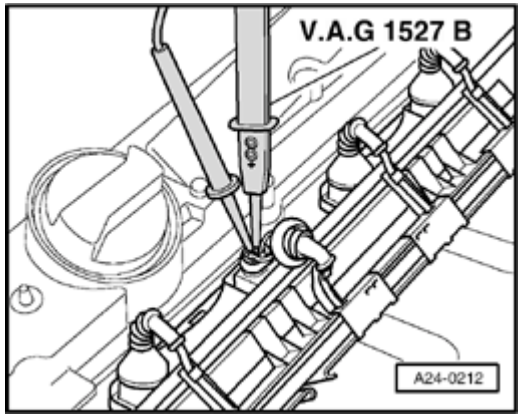

- Connect VAG1527B voltage tester between sockets 2 (signal) and 1 (B+).
- Operate starter briefly (engine can also start).
  - LED must blink.

Note:

Voltage testers do not go out completely during low current pick-up between activations by the ECM, but rather continue to glow a little and then get slightly brighter during activation.

cardiagn.com

24-42

If LED does not blink:

- Connect VAG1598/31 test box at wiring harness to Engine Control Module (ECM), do not connect ECM ⇒ Page 24-19 .

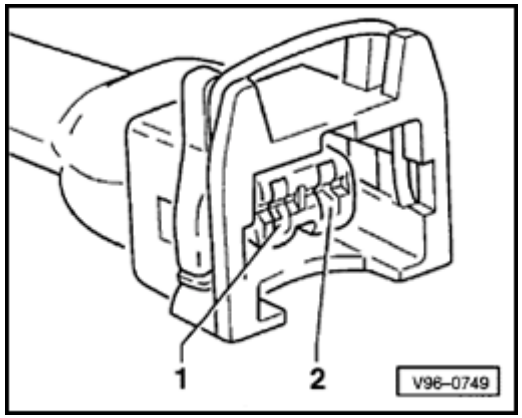

- Check following wire connections for open circuit and short circuit to Ground (GND) and B+:

Cylinder	Fuel injector harness connector Terminal	VAG1598/31 test box Socket
1	2	96
2	2	89
3	2	97
4	2	88

- Repair open circuit or short circuit if necessary.

If wire connection is OK:

- Replace Engine Control Module (ECM) ⇒ Page 24-23

cardiagn.com

24-43

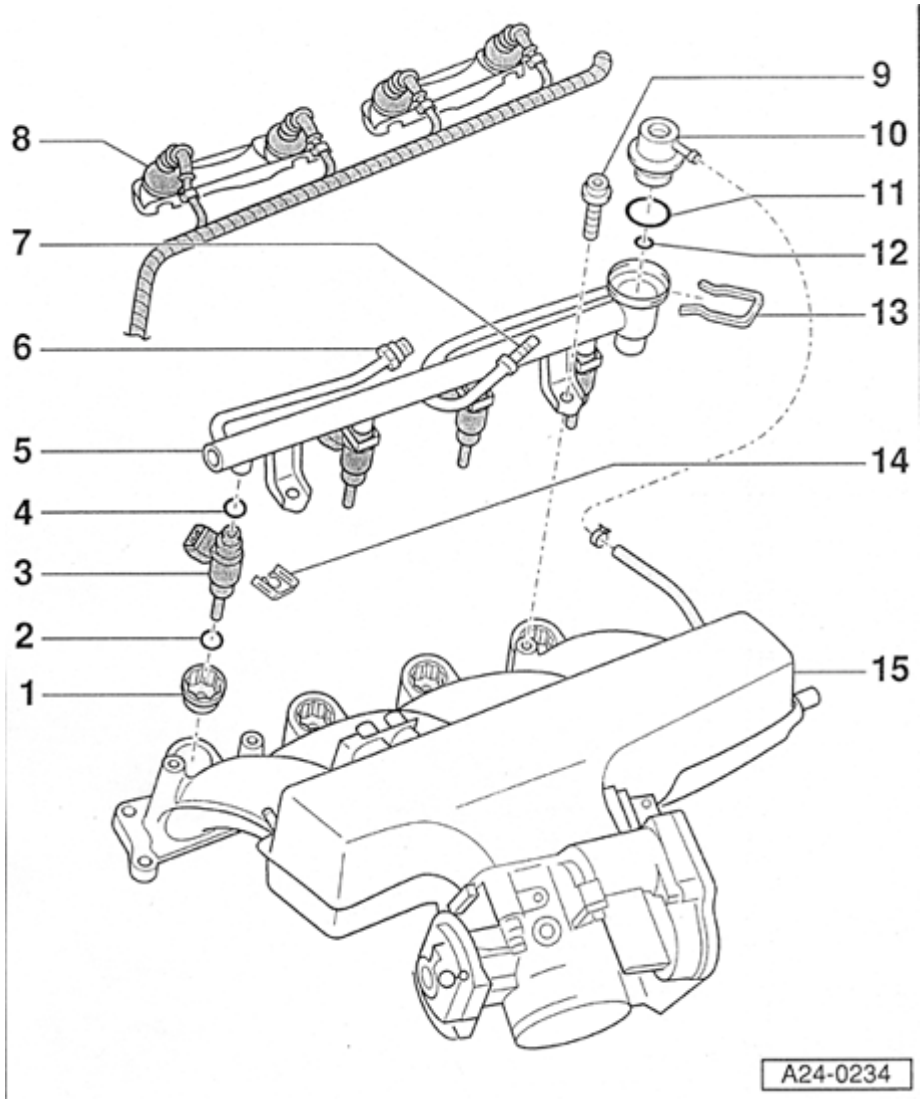

Fuel rail with fuel injectors, disassembling and assembling

1 - Fuel injector insert, 3 Nm

- Use fluid securing material D 000 600 A2 to insert.

2 - O-ring

- Removing and installing ⇒ Page 24-46
- Always replace
- Coat with clean engine oil

3 - Fuel injectors -N30- through -N33-

- Removing and installing ⇒ Page 24-46

cardiagn.com

24-44

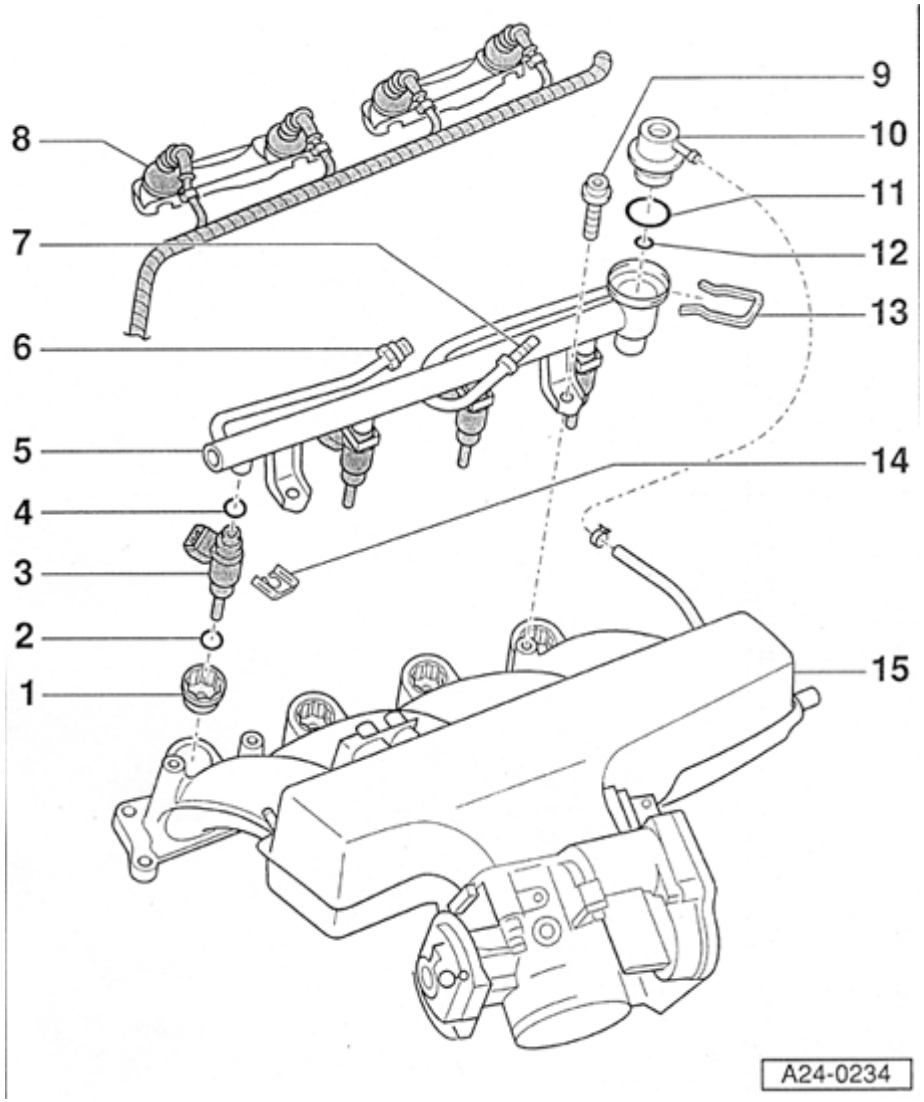

4 - O-ring

- Removing and installing ⇒ Page 24-46
- Always replace
- Coat with clean engine oil

5 - Fuel distributor

6 - Fuel supply line

- Tighten to 25 Nm

7 - Fuel return line

8 - Harness connector

- for injectors
- 4x

9 - Socket head bolt- 10 Nm

10 - Fuel pressure regulator

cardiagn.com

24-45

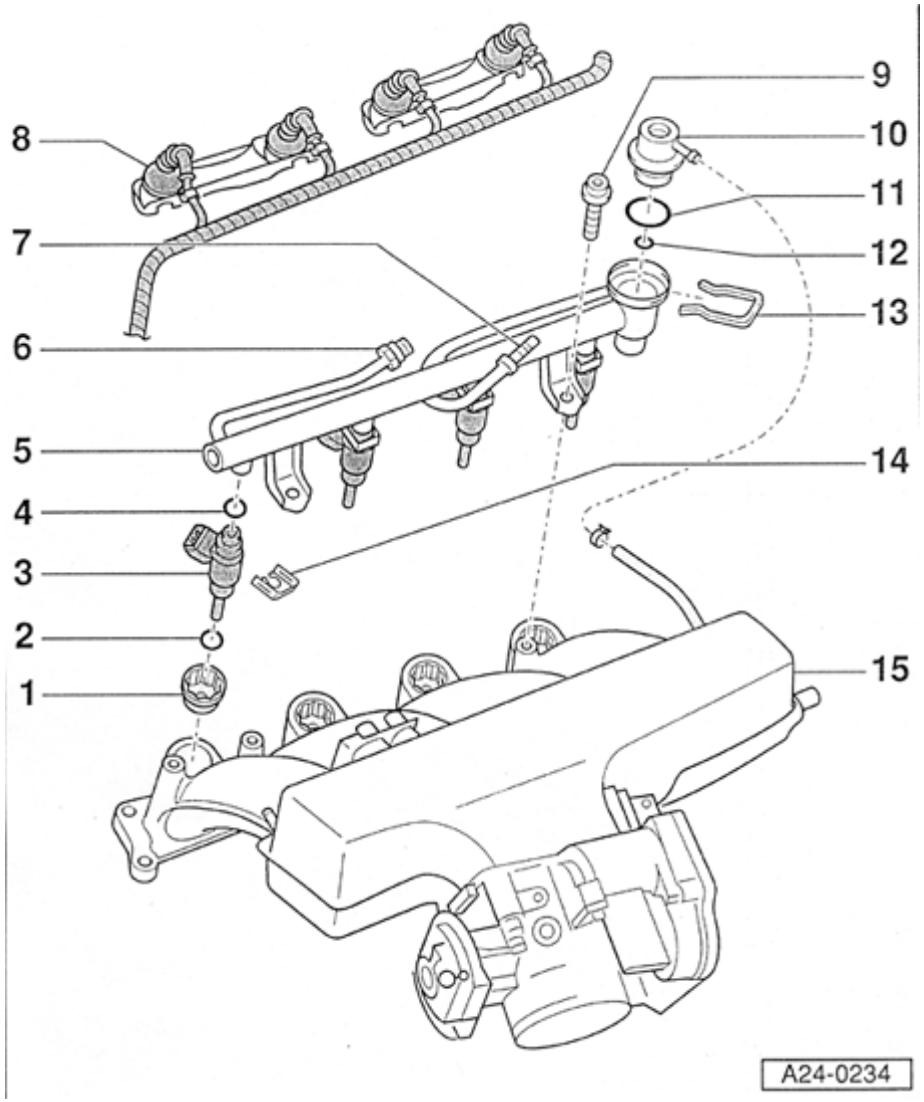

11 - O-ring

- Always replace

12 - O-ring

- Always replace

13 - Retaining clip

- For fuel pressure regulator

14 - Retaining clip

- Make sure clip is correctly seated on fuel injector and fuel rail

15 - Intake manifold

- With throttle valve control module -J338-
- With Intake Air Temperature (IAT) sensor -G42-
- Removing

⇒ *Repair Manual, 1.8 Liter 4-Cyl. 5V Turbo Engine Mechanical, Engine Code(s): AEB, ATW, Repair Group 15; Cylinder head, removing and installing; Intake manifold, removing and installing*

cardiagn.com

24-46

Fuel injectors, removing and installing

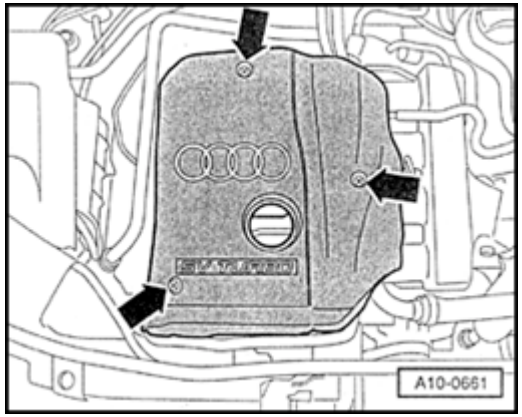

- Remove engine cover (arrows).
- Disconnect wiring/connectors at:
- Fuel injectors -N30-, -N31-, -N32-, -N33-
- Intake Air Temperature (IAT) sensor -G42-
- Camshaft Position (CMP) sensor 2 -G40-
- Throttle valve control module -J338-

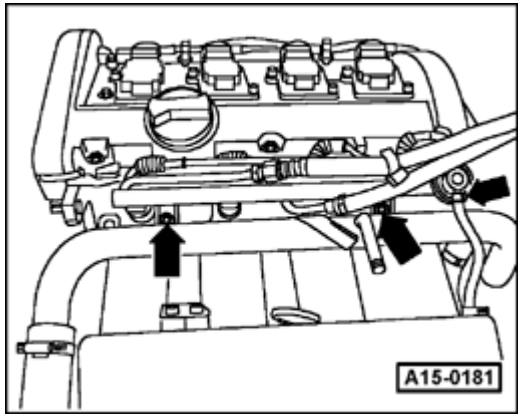

- Remove retaining bolts for fuel supply rail and disconnect vacuum line at fuel pressure regulator (arrows).

cardiagn.com

24-47

- Disconnect fuel distributor with injectors from intake plenum and set aside in rear of engine compartment on a clean cloth.

WARNING!

Fuel system is under pressure! Before opening system, place rags around the connection point. Then release pressure by carefully loosening connection.

- Disengage retaining clip and remove fuel injector.

Note:

Fuel lines must be removed before replacing fuel distributor.

Installation is reverse of removal, noting the following:

- Remove O-rings at all opened connections. (Never remove plastic cap from valve head to replace front O-ring - pry O-ring off over plastic cap).

- Lightly lubricate O-rings with clean engine oil.

cardiagn.com

24-48

- Make sure fuel injectors are in place and seated correctly
- Check clip for unobstructed fitting.
- Place fuel rail with secured fuel injectors onto intake manifold, and apply uniform pressure to press it in.

Tightening torque

Component	Nm
Fuel distributor at intake manifold	10

cardiagn.com

24-49

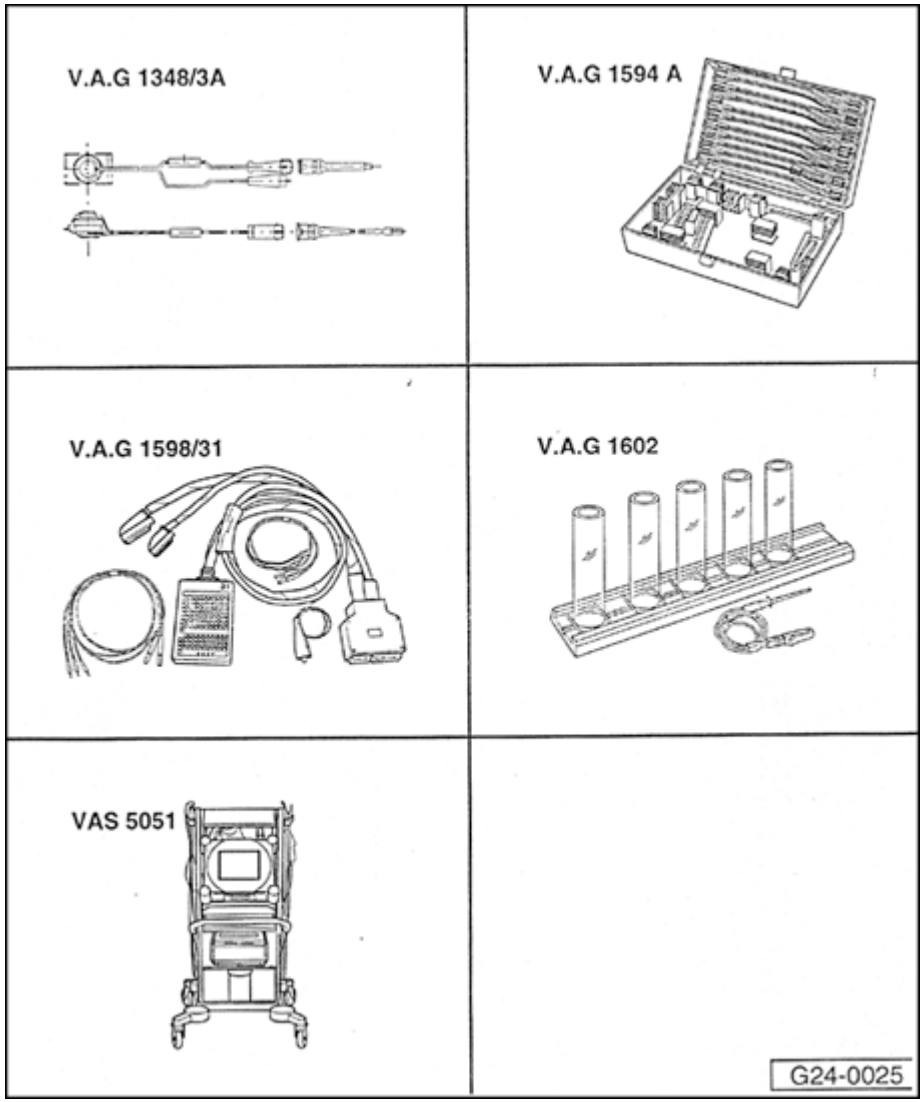

Fuel injector injection quantity, proper seal and spray pattern, checking

Special tools and equipment

- VAG1348/3A
- VAG1594A
- VAG1598/31
- VAG1602
- VAS5051 with VAG5051/1

- or

- VAG1551 with VAG1551/3A

cardiagn.com

Test requirement:

- Fuel pressure OK, checking ⇒ Page 24-33 .

Test sequence

- Remove fuel distributor including fuel injectors from intake manifold ⇒ Page 24-46 . Fuel lines remain connected.

- Connect VAG1598/31 test box at wiring harness to Engine Control Module (ECM), do not connect ECM ⇒ Page 24-19 .

Checking Proper Seal

- Bridge terminals 1 and 65 at test box using wires from VAG1594A adapter test kit.

- Switch ignition on.

  ♦ Fuel Pump (FP) must run.

- Check proper seal of fuel injectors (visual inspection). With Fuel Pump (FP) running, only 1 to 2 drops per minute may drip out per injector.

- If fuel loss is greater, stop Fuel Pump (FP) from

cardiagn.com

running (switch off ignition) and replace faulty fuel injector ⇒ Page 24-46 .

cardiagn.com

24-51

Checking Injection Quantity

- Insert fuel injector to be tested in a measuring glass from VAG1602 injection quantity test device.

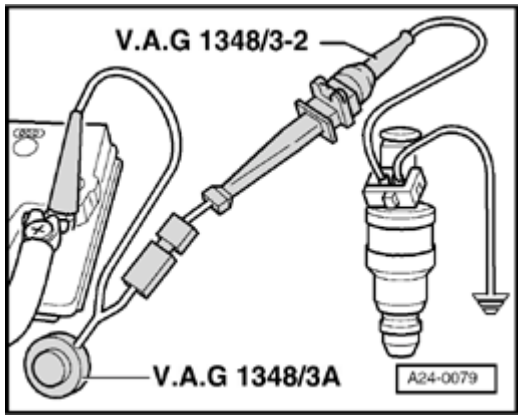

- Connect one terminal of fuel injector to engine Ground (GND) using an adapter cable and an alligator clip from VAG1594A connector test kit.
- Connect second terminal of fuel injector to B+ using VAG1348/3A remote control, VAG1348/3-2 adapter cable and assisting cable.
- Bridge terminals 1 and 65 at test box using wires from VAG1594A adapter test kit.
- Bridge terminals 1 and 65 at test box using wires from VAG1594A adapter test kit.
- Switch ignition on.
  - ♦ Fuel Pump (FP) must run.
- Activate VAG1348/3A remote control for 30 seconds.
- Perform measurement on all fuel injectors.

cardiagn.com

- After all four fuel injectors have been activated, place measuring glasses on an even surface.

  - Specified value for each fuel injector: 135 ± 10 ml

- If measured value of one or more fuel injectors is outside of specified range, switch Fuel Pump (FP) off (switch ignition off) and replace faulty fuel injector ⇒ Page 24-46 .

- If measured values of all fuel injectors are outside specified range, check fuel pressure ⇒ Page 24-33 .

Note:

Also check spray pattern when checking injection quantity. Spray pattern must be the same for all injectors

- Install fuel injectors together with fuel distributor ⇒ Page 24-47 .

cardiagn.com

24-53

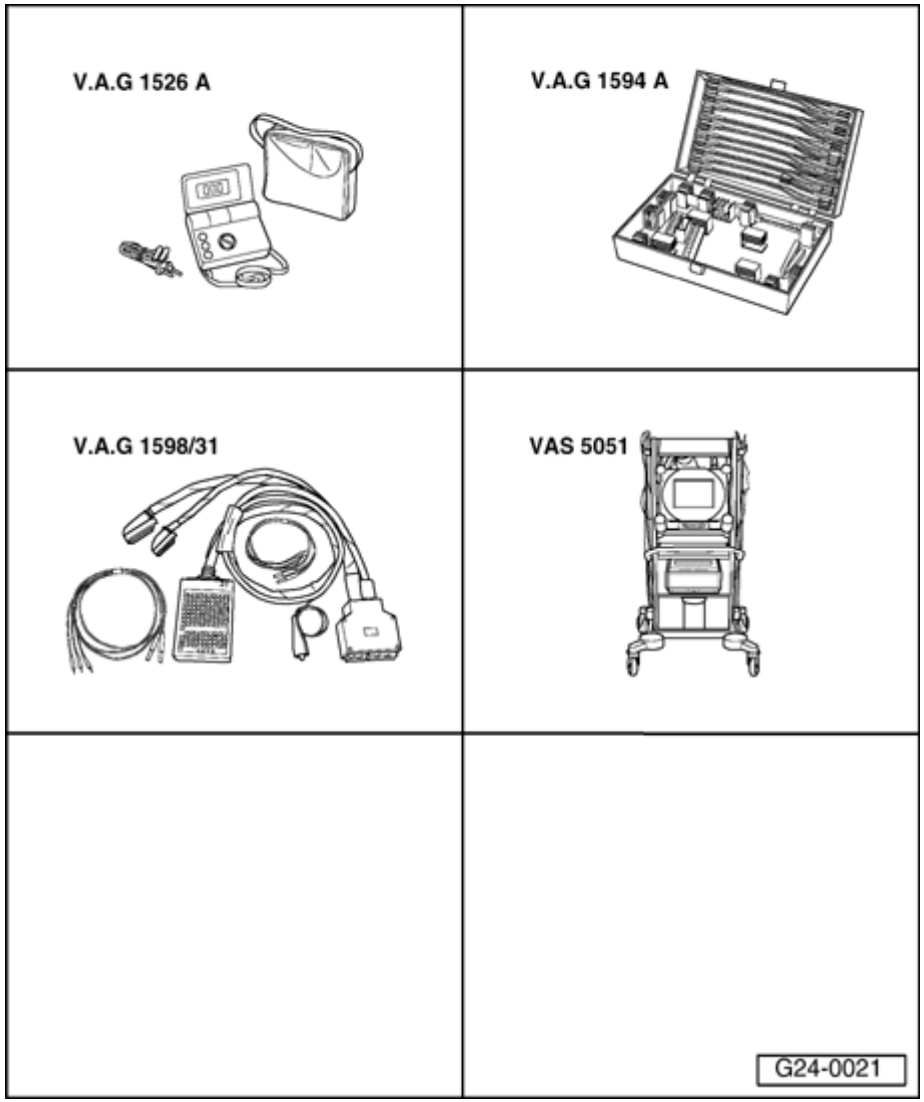

Fuel Pump (FP) relay -J17- and activation, checking

Special tools and equipment

- VAG1526A
- VAG1594A
- VAG1598/31
- VAS5051 with VAG5051/1

- or

- VAG1551 with VAG1551/3A

cardiagn.com

24-54

Component location ⇒ Overview of component locations ⇒ Page 24-5 .

Voltage is supplied to the Fuel Pump (FP) and several components of the injection system via the Fuel Pump (FP) relay -J17-.

Engine must be turning for Fuel Pump (FP) relay -J17- to close. This means that the relay does not receive Ground (GND) (via ECM) until the ECM recognizes RPM signals.

Test requirement:

- Battery voltage at least 12.7 V

Function test of Fuel Pump (FP) relay

- Remove driver-side storage compartment.

⇒ *Repair Manual, Body Interior, Repair Group 68*

- Connect VAS5051 tester or VAG1551 scan tool and select control module for engine electronics using "address word" 01 ⇒ Page 01-10 . Ignition must remain switched on.

- Initiate output Diagnostic Test Mode (DTM) ⇒

cardiagn.com

Page 01-49 and activate Evaporative Emission (EVAP) canister purge regulator valve -N80-.

cardiagn.com

24-55

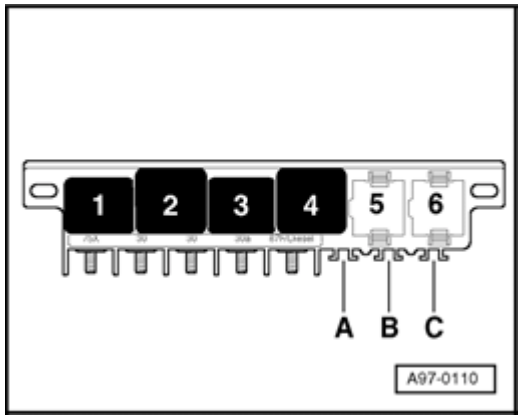

- Fuel Pump (FP) relay (at position 4 of central electrics in driver's footwell, left) must trigger and Fuel Pump (FP) must run.

A - If relay does not trigger:

- Check voltage supply of Fuel Pump (FP) relay ⇒ Page 24-55 .
- Checking activation of Fuel Pump (FP) relay ⇒ Page 24-56 .

B - If relay triggers, but Fuel Pump (FP) does not run:

- Check voltage supply for Fuel Pump (FP) and components (via Fuel Pump -FP- relay) ⇒ Page 24-58 .

Check voltage supply of Fuel Pump (FP) relay

- Remove Fuel Pump (FP) relay.

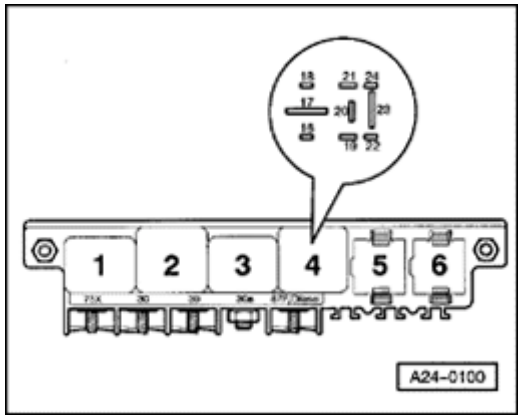

- Connect multimeter to terminal 17 of relay socket and Ground (GND) for voltage measurement.
  - Specification: approx. battery voltage

cardiagn.com

24-56

If specified value is not obtained:

- Replace central electrics.

Checking activation of Fuel Pump (FP) relay

- Switch ignition off.

- Connect VAG1598/31 test box at wiring harness to Engine Control Module (ECM), do not connect ECM ⇒ Page 24-19 .

- Switch ignition on.

- Bridge terminals 1 and 65 at test box using wires from VAG1594A adapter test kit.

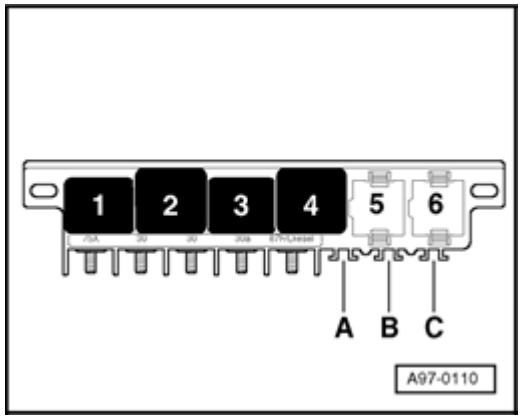

- Fuel Pump (FP) relay (at position 4 of central electrics in driver's footwell, left) must trigger.

If relay triggers now, but didn't during output DTM:

- Replace Engine Control Module (ECM) ⇒ Page 24-23

If relay does not trigger:

- Switch ignition off.
- Remove cable bridge.

cardiagn.com

- Remove Fuel Pump (FP) relay.

cardiagn.com

24-57

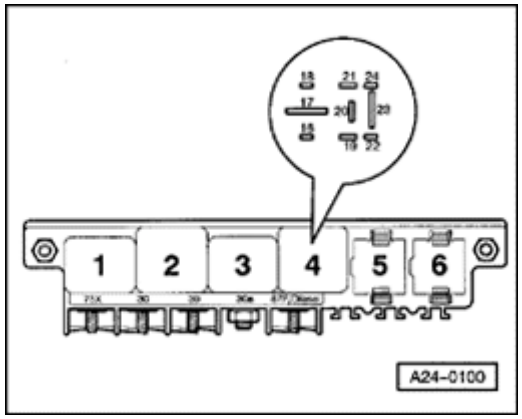

- Connect multimeter for voltage measurement as follows.

Central electronics in driver-side footwell, left, position 4 Terminal	Measure to
19	Engine Ground (GND)

- Switch ignition on.
  - ♦ Specification: approx. battery voltage

If specified value is not obtained:

- Check wire connections.

⇒ *Electrical Wiring Diagrams, Troubleshooting & Component Locations*

If specified value is obtained:

- Check following wire connection for open circuit and short circuit to Ground (GND) and B+:

Central electronics in driver-side footwell, left, position 4 Terminal	VAG1598/31 test box Socket

cardiagn.com

16	65

cardiagn.com

24-58

- Repair open circuit or short circuit if necessary.

If no malfunctions are detected:

- Replace Fuel Pump (FP) relay -J17-.

- Re-connect Engine Control Module (ECM).

Check voltage supply for Fuel Pump (FP) and components

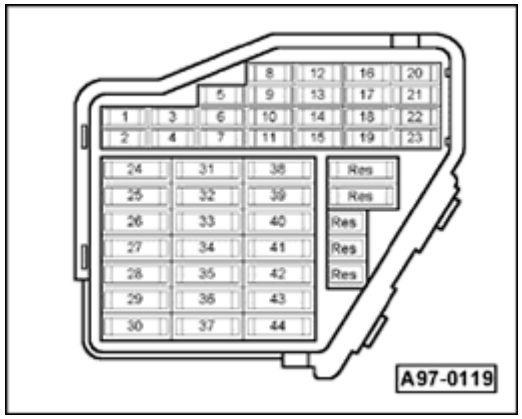

- Remove fuses S228, S232, and S234 (positions 28, 32, and 34) from fuse holder.
- Initiate output Diagnostic Test Mode (DTM) ⇒ Page 01-49 and activate Evaporative Emission (EVAP) canister purge regulator valve -N80-.
- Connect multimeter for voltage measurement to Ground (GND) and to one terminal of following fuses in fuse holder.

Circlip	Specified value at one of the terminals
S228	approx. battery voltage
S232	approx. battery voltage
S234	approx. battery voltage

cardiagn.com

24-59

If specified values are not obtained:

- Repeat test at another terminal of fuse socket.

If specified values are not obtained again:

- Check wire connections.

⇒ *Electrical Wiring Diagrams, Troubleshooting & Component Locations*

If no malfunctions are detected:

- Replace Fuel Pump (FP) relay -J17-.

- Re-insert fuses.

cardiagn.com

24-60

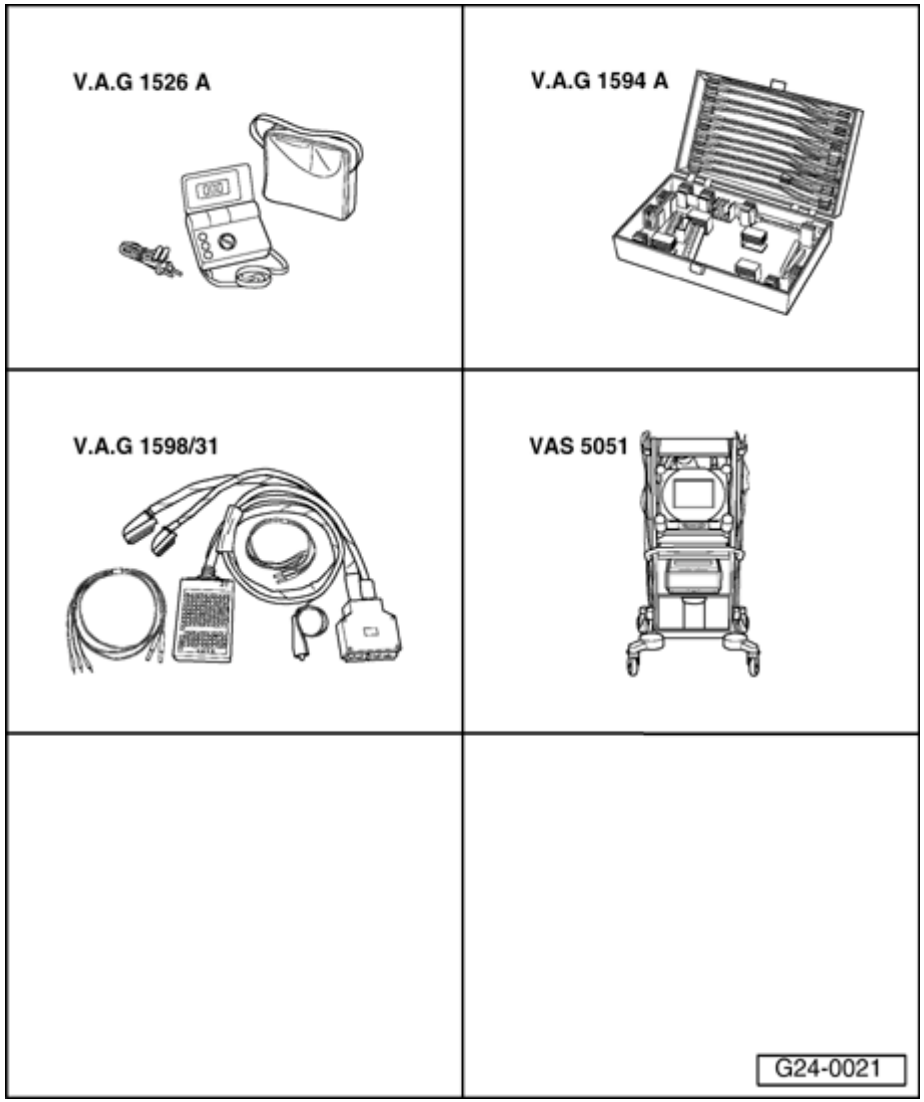

Mass Air Flow (MAF) sensor -G70-, checking

Special tools and equipment

- VAG1526A
- VAG1594A
- VAG1598/31
- VAS5051 with VAG5051/1

- or

- VAG1551 with VAG1551/3A

cardiagn.com

Component location ⇒ Overview of component locations ⇒ Page 24-5

Test requirements:

- Coolant Temperature at least 80 ° C.
- Electrical consumers switched off (radiator fan must NOT run during test).
- A/C switched off.

Checking function

- Connect VAS5051 tester or VAG1551 scan tool and select control module for engine electronics using "address word" 01 ⇒ Page 01-10 . Engine must run at idle.

Rapid data transfer	**HELP**
Select function XX	

When indicated on display

- Press buttons -0- and -4- to select "Initiate basic setting" and press -Q- button to confirm input.

Basic Setting	**Q**
Enter display group number XXX	

When indicated on display

- Press buttons -0-, -0- and -2- to select "display group number 002" and press -Q- button to confirm input.

When indicated on display

cardiagn.com

System in basic setting 2			
1	2	3	4

- Check specified values for load detection.

cardiagn.com

24-62

	Display fields			
	1	2	3	4
Display group 002: Air mass taken in with engine at idle and operating temperature				
Display	xxx /min	xxx %	**xx.x ms**	**xxx.x g/s**
Indicated	Engine speed (RPM)	Load	**mean injection time**	**Air mass**
Specified value	FWD: 740 to 860 RPM AWD: 800 to 920 RPM	15 to 33 %	**1.0 to 4.0 ms**	**2.0 to 4.5 g/s**
Note	---	---	**If specified value is not obtained: Evaluation** ⇒ **Page 24-63**	

If specified value is obtained:

- Press → button.

Rapid data transfer	**HELP**
Select function XX	

Indicated on display (function selection):

cardiagn.com

Evaluation display group 002

Display field: 3	Possible cause	Corrective action
less than 1.0 ms	♦ Smaller values are only possible when driving in deceleration mode	
larger than 4.0 ms	♦ Engine under load due to power accessories.	- Reduce load (A/C system/power steering/generator)
	♦ Poor idle (does not run on all cylinders)	- Check spark plugs. - Check fuel injectors ⇒ Page 24-38 .
	♦ Throttle valve control module - J338- faulty	- Check throttle valve control module ⇒ Page 24-120
Display field: 4	**Possible cause**	**Corrective action**
smaller than 2.0 g/s	♦ large false air mass between intake manifold and Mass Air Flow (MAF) sensor ♦ Voltage supply of Mass Air Flow (MAF) sensor or wire connections to Engine Control Module (ECM)	- Check intake system for leaks (false air) ⇒ Page 24-68 . - Check voltage supply and wire connections ⇒ Page 24-64
larger than 4.5 g/s	♦ Engine under load due to power accessories.	- Reduce load (A/C system/power steering/generator)
	♦ Voltage supply of Mass Air Flow (MAF) sensor or wire connections to Engine Control Module (ECM)	- Check voltage supply and wire connections ⇒ Page 24-64

cardiagn.com

24-64

Voltage supply for Mass Air Flow (MAF) sensor, checking

Test requirements:

- Fuse for Mass Air Flow (MAF) sensor OK

⇒ *Electrical Wiring Diagrams, Troubleshooting & Component Locations*

- Fuel Pump (FP) relay OK; checking ⇒ Page 24-53 .

Note:

Voltage is supplied to Mass Air Flow (MAF) sensor from Fuel Pump (FP) relay.

- Disconnect connector from Mass Air Flow (MAF) sensor.

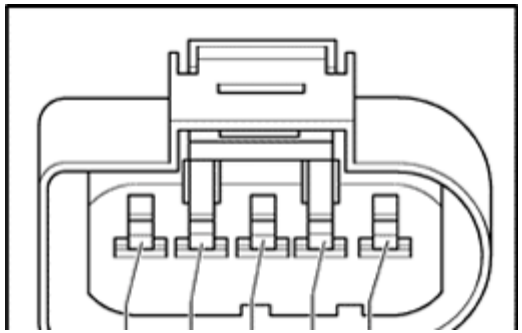

- Connect multimeter for voltage measurement as follows.

Harness connector Terminal	Measure to
2	Engine Ground (GND)

cardiagn.com

- Operate starter briefly (engine can also start).
  - Specification: approx. battery voltage

cardiagn.com

24-65

If specified value is not obtained:

- Check wire connection from terminal 2 of connector to Fuel Pump (FP) relay via fuse for open circuit and short circuit to Ground (GND):

⇒ *Electrical Wiring Diagrams, Troubleshooting & Component Locations*

- Repair open circuit or short circuit if necessary.

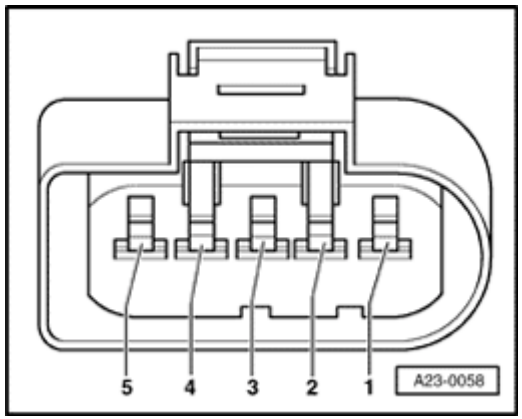

- Connect multimeter to terminal 2 and terminal 3 of connector for voltage measurement.
- Operate starter briefly (engine can also start).
  - ♦ Specification: approx. battery voltage

Note:

Ground (GND) from the ECM is present at terminal 3 of connector.

If specified value is not obtained:

- Check wire connections ⇒ Page 24-67 .

cardiagn.com

24-66

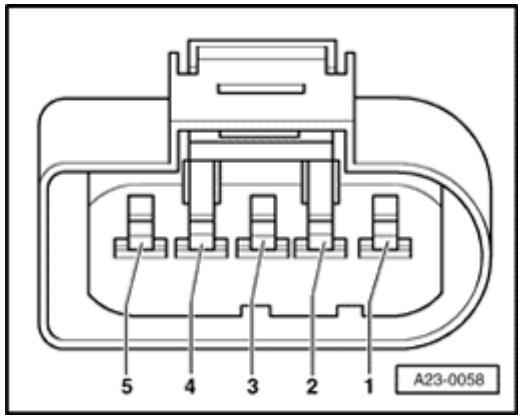

- Connect multimeter to terminal 3 and terminal 4 of connector for voltage measurement.
  - ♦ Specification: about 5 V

If specified value is not obtained:

- Check wire connections ⇒ Page 24-67 .

cardiagn.com

24-67

Check wire connections for Mass Air Flow (MAF) sensor

Note:

Signal wire is also checked during wire test.

- Connect VAG1598/31 test box at wiring harness to Engine Control Module (ECM), do not connect ECM ⇒ Page 24-19 .

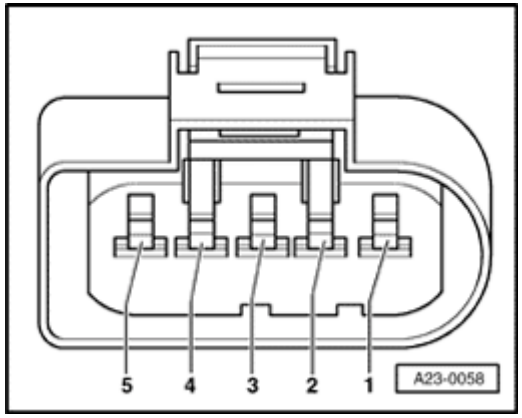

- Check following wire connections for open circuit and short circuit to Ground (GND) and B+:

Harness connector Terminal	VAG1598/31 test box Socket
3	27
4	53
5	29

- Repair open circuit or short circuit if necessary.
- Also check all wires for short circuit to each other.

If wire connection is OK:

- Replace Mass Air Flow (MAF) sensor -G70-.

cardiagn.com

24-68

Intake system, checking for leaks (unmetered air)

Special tools and equipment

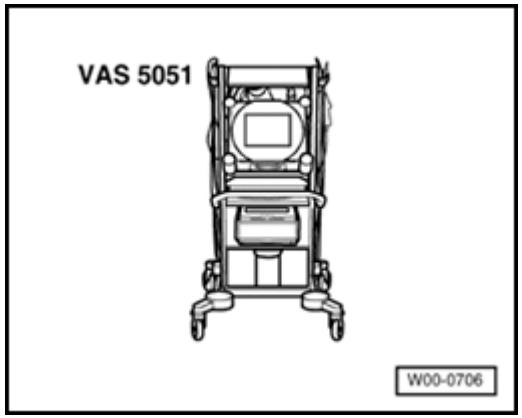

- VAS5051 with VAG5051/1

  or

- VAG1551 with VAG1551/3A
- Engine leak detection spray G 001 800 A1

Note:

- *The negative pressure in the intake system sucks in the leak detection spray with the unmetered air. Leak detection spray decreases ignition quality and performance of the fuel mixture. This causes a reduction in engine speed and a sharp increase of CO content.*
- *It is absolutely necessary to follow the safety precautions listed on the can.*

cardiagn.com

24-69

Test sequence

- Connect VAS5051 tester or VAG1551 scan tool and select control module for engine electronics using "address word" 01 ⇒ Page 01-10 . Engine must run at idle.

Rapid data transfer	**HELP**
Select function XX	

When indicated on display

- Press buttons -0- and -8- to select "Read Measuring Value Block" and press -Q- button to confirm input.

Read measuring value block	**Q**
Enter display group number XXX	

When indicated on display

- Press buttons -0-, -0- and -1- to select "display group number 001" and press -Q- button to confirm input.

Read Measuring Value Block 1			→
1	**2**	**3**	**4**

Indicated on display(1 to 4 = display fields)

- Make note of engine speed in display field 1.
- Spray intake system parts with engine leak detection spray in a systematic manner.

If engine speed decreases:

- Check sprayed part of intake system for leaks, and eliminate error.

cardiagn.com

24-70

- Press → button.

Rapid data transfer	**HELP**
Select function XX	

Indicated on display (function selection):

- Press buttons -0- and -6- to select "End output" and press -Q- button to confirm input.
- Switch ignition off.

cardiagn.com

24-71

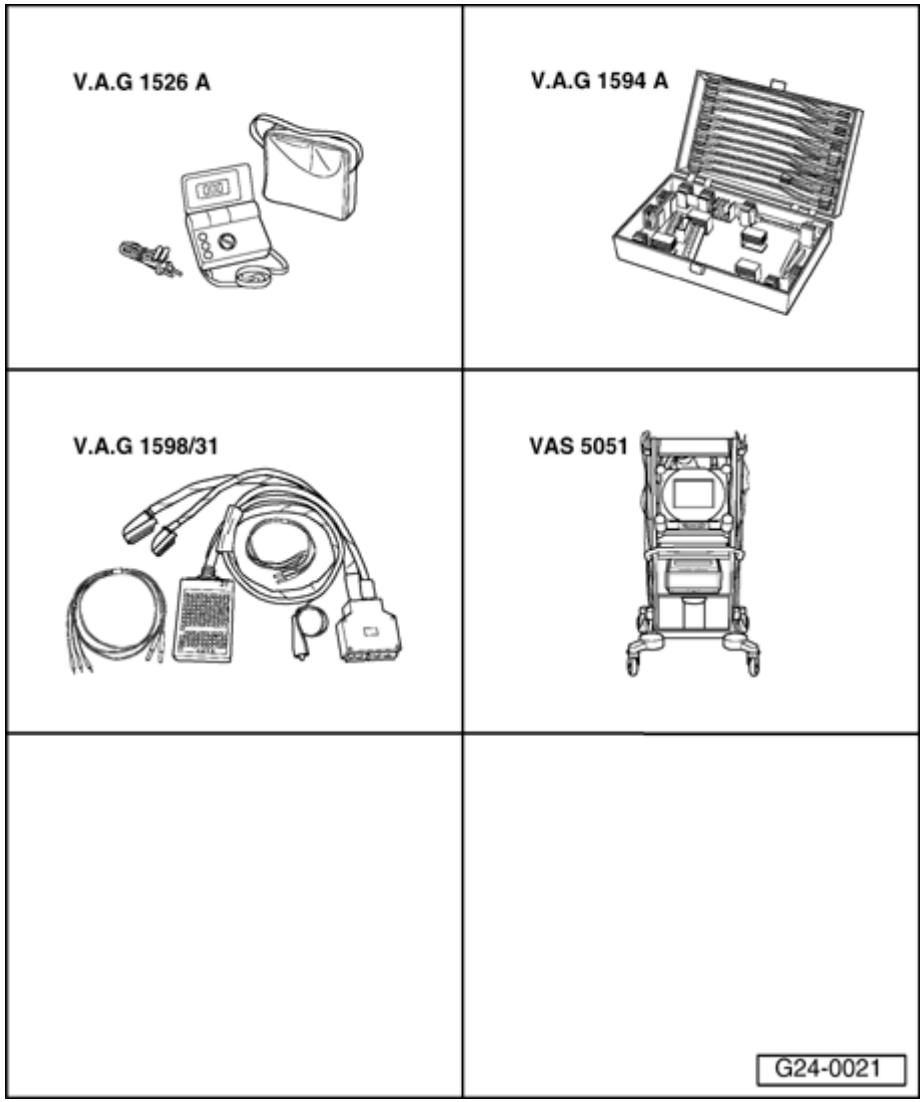

Oxygen sensor control, checking

Oxygen sensor and oxygen sensor control before catalytic converter, checking

Special tools and equipment

- VAG1526A
- VAG1594A
- VAG1598/31
- VAS5051 with VAG5051/1

- or

- VAG1551 with VAG1551/3A

cardiagn.com

24-72

Test requirements:

- Exhaust system free of leaks.
- Coolant Temperature at least 80 ° C.

Test sequence

- Connect VAS5051 tester or VAG1551 scan tool and select control module for engine electronics using "address word" 01 ⇒ Page 01-10 . Engine must run at idle.

Rapid data transfer	**HELP**
Select function XX	

When indicated on display

- Press buttons -0- and -4- to select "Initiate basic setting" and press -Q- button to confirm input.

Basic Setting	**Q**
Enter display group number XXX	

When indicated on display

- Press buttons -0-, -3- and -0- to select "display group number 030" and press -Q- button to confirm input.
- Check specified value in display field 1.

Note:

- *Increase engine speed to obtain specified values faster.*
- *"Oxygen sensor status" indicates status of oxygen sensor control and oxygen sensors.*

cardiagn.com

	Display fields			
	1	2	3	4
Display group 030: Oxygen sensor status				
Display	**X X X**	X X X		
Indicated	**Oxygen sensor status, bank 1, sensor 1**	Oxygen sensor status, bank 2, sensor 1		
Functional range	**0 = off** **1 = on**	0 = off 1 = on		
Specified value	**1 1 1**	1 1 0		
Note	**If specified value is not obtained ⇒ Page 24-80** **If specified value is obtained but there is a malfunction stored in DTC memory ⇒Check oxygen sensor adaptation values and control, ⇒ Page 24-74**			

Significance of 3 digit indications in display group 030			
X	X	X	**Display fields 1 and 2**
		X	Oxygen sensor control: 0= not active; 1 = active
	X		Operational readiness of oxygen sensor: 0= not active; 1 = active
X			Condition of oxygen sensor heater: 0= not active; 1 = active

Note:

The first field of the 3 digit indication (heating) fluctuates between 0 and 1.

cardiagn.com

24-74

- Do not start test until indication in display field 1 has reached "111" at least once.

Checking oxygen sensor adaptation values and control

- Press -C- button.

Basic Setting Q
Enter display group number XXX

When indicated on display

- Press buttons -0-, -3- and -2- to select "display group number 032" and press -Q- button to confirm input.

System in basic setting 32 →
1 2 3 4

When indicated on display

- Check oxygen sensor values in display fields 1 and 2:

cardiagn.com

24-75

	Display fields			
	1	2	3	4
Display group 036: Oxygen sensor adaptation values				
Display	**xx.x %**	**xx.x %**		
Indicated	**Oxygen sensor adaptation value Bank 1, sensor 1at idle (additive)**	**Oxygen sensor adaptation value Bank 1, sensor 1at partial throttle(multiple)**		
Specified value	**-10.0 to 10.0 %** **can fluctuate slightly**	**-10.0 to 10.0 %** **can fluctuate slightly**		
Note	**If specified value is not obtained ⇒ Page 24-78**			

- Press -C- button.

Basic Setting Q
Enter display group number XXX

When indicated on display

- Press buttons -0-, -3- and -3- to select "display group number 033" and press -Q- button to confirm input.

System in basic setting 33 →
1 2 3 4

When indicated on display

- Check oxygen sensor control in display fields 1 and 2.

cardiagn.com

24-76

	Display fields			
	1	2	3	4
Display group 033: Oxygen sensor control				
Display	**xx.x %**	**x.xxx V**		
Indicated	**Oxygen sensor control Bank 1, sensor 1**	**Oxygen sensor voltage, Bank 1, sensor 1**		
Specified value	**Value must fluctuate at least 2 % in the range -10.0 to 10.0 %**	**Value must fluctuate approx. 0.3 V in the range 0.000 to 1.000 volts**		
Note	**If specified value is not obtained ⇒Continuation, ⇒ Page 24-77**	**If specified value is not obtained ⇒Evaluation display group 033, ⇒ Page 24-80**		

cardiagn.com

Continuation

If specified value in display field 1 is not obtained or if value does not fluctuate at least 2 %:

- Road test vehicle in order to free oxygen sensor of possible residue and repeat test.

If specified value in display field 1 is not obtained even after road test or if value does not fluctuate at least 2 %:

- Check primary voltage ⇒ Page 24-80 .
- Check oxygen sensor heating ⇒ Page 24-99 .
- Check oxygen sensor before catalytic converter for aging ⇒ Page 24-83 .

cardiagn.com

Display group 032

Display field: 1 / 2	Possible cause	Corrective action
Oxygen sensor adaptation value in range: -10.0 to -25.0 %	♦ Leak in intake area (pressure side between turbocharger and intake manifold)	- Check intake system for leaks and repair false air ⇒ Page 24-68
	♦ Oil thinning	- Oil change or perform swift country road test
	♦ High oil consumption	
	♦ Mass Air Flow (MAF) sensor faulty	- Mass Air Flow (MAF) sensor, checking ⇒ Page 24-60
	♦ Evaporative Emission (EVAP) canister purge regulator valve remains stuck in open position	- Check Evaporative Emission (EVAP) canister purge regulator valve ⇒ Page 24-107
	♦ Fuel pressure too high	- Check fuel pressure regulator ⇒ Page 24-33
	♦ Fuel injector does not close	- Check fuel injectors ⇒ Page 24-38 .
	♦ Oxygen sensor heating faulty ♦ Oxygen sensor faulty	- Check oxygen sensor heating ⇒ Page 24-99

cardiagn.com

Display group 032

Display field: 1 / 2	Possible cause	Corrective action
Oxygen sensor adaptation value in range:10.0 to 25.0 %	♦ False air in intake area	- Check intake system for leaks and repair false air ⇒ Page 24-68
	♦ Fuel pressure too low	- Check fuel pressure regulator ⇒ Page 24-33
	♦ Mass Air Flow (MAF) sensor faulty	- Mass Air Flow (MAF) sensor, checking ⇒ Page 24-60
	♦ Oxygen sensor heating faulty ♦ Oxygen sensor faulty	- Check oxygen sensor heating ⇒ Page 24-99
	♦ Fuel injector does not open or opens only partially	- Check fuel injectors ⇒ Page 24-38 .
	♦ Evaporative Emission (EVAP) Canister Purge Regulator Valve sticks	- Check Evaporative Emission (EVAP) canister purge regulator valve ⇒ Page 24-107

cardiagn.com

Evaluation display group 033

Display field: 2	Possible cause	Corrective action
constant about 0.450 V	♦ Open circuit in wire 4 between oxygen sensor and control module	- Check primary voltage ⇒ Page 24-80
	♦ Open circuit in wire 3 between oxygen sensor and control module	
constant about 0.200 V	♦ Oxygen sensor faulty	- Replace oxygen sensor
larger than 1.100 V	♦ Short circuit to B+ in wire 4 between oxygen sensor and control module	- Check oxygen sensor wiring, oxygen sensor before catalytic converter ⇒ Page 24-81
smaller than 0.150 V	♦ Short circuit to Ground (GND) in wire 4 between oxygen sensor and control module	

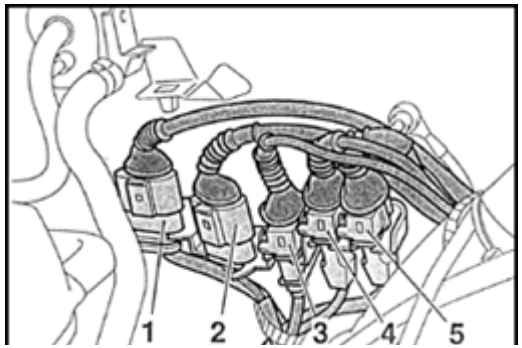

Checking primary voltage

- Disconnect 4-pin harness connector -2- (black) to Heated Oxygen Sensor (HO2S) -G39- before catalytic converter.

Note:

Coolant reservoir screws must be removed and coolant reservoir must be placed to side in order to access the harness connector. The coolant hoses can remain connected.

cardiagn.com

24-81

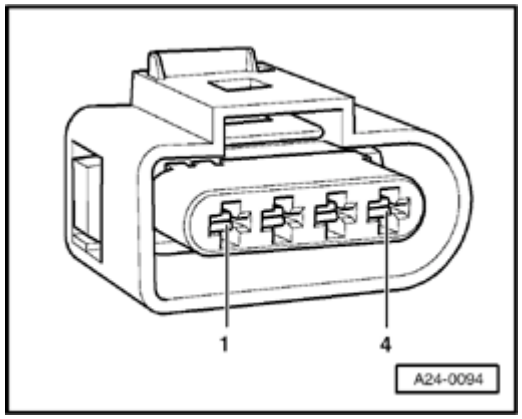

- Connect multimeter between terminal 3 and 4 for voltage measurement.
- Switch ignition on.
  - ♦ Specification: 0.400 to 0.500 V
- Switch ignition off.

If specified value is not obtained:

- Check oxygen sensor wiring.

If specified value is obtained:

- Replace Heated Oxygen Sensor (HO2S) -G39-.

Checking oxygen sensor wires

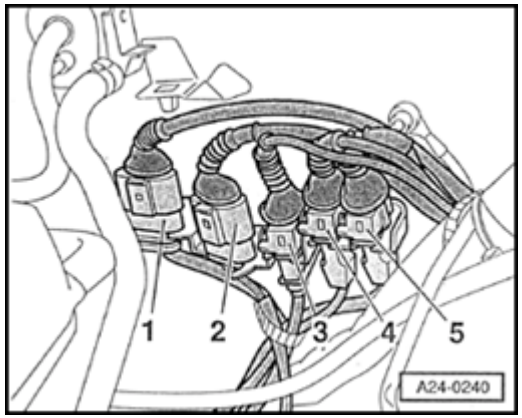

- Disconnect 4-pin harness connector -2- (black) to Heated Oxygen Sensor (HO2S) -G39- before catalytic converter.

Note:

Coolant reservoir screws must be removed and coolant reservoir must be placed to side in order to access the harness connector. The coolant hoses can remain connected.

cardiagn.com

- Connect VAG1598/31 test box at wiring harness to Engine Control Module (ECM), do not connect ECM ⇒ Page 24-19 .

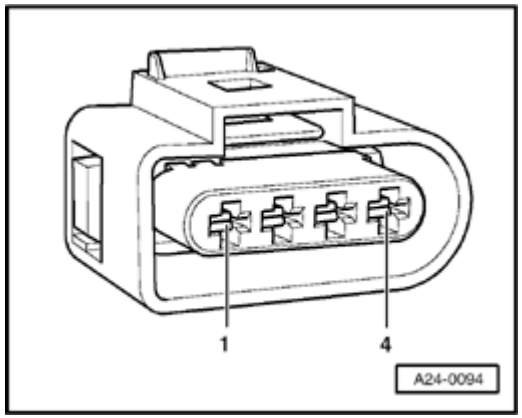

- Check following wire connections for open circuit.

Harness connector Terminal	VAG1598/31 test box Socket
3	51
4	70

- Repair open circuit if necessary.
- Check wires to each other for short circuit.

If wire connection is OK:

- Replace Engine Control Module (ECM) ⇒ Page 24-23

cardiagn.com

24-83

Oxygen sensor aging (oxygen sensor before catalytic converter), checking

Special tools and equipment

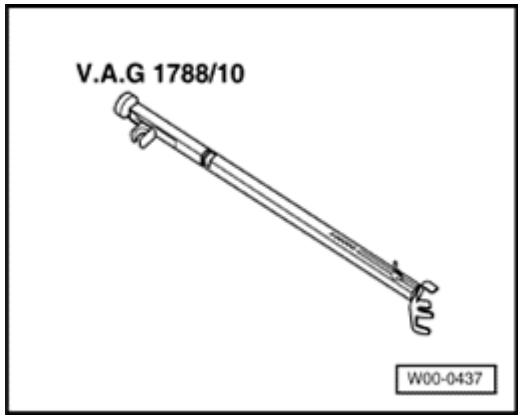

- VAG1788/10 RPM adjuster

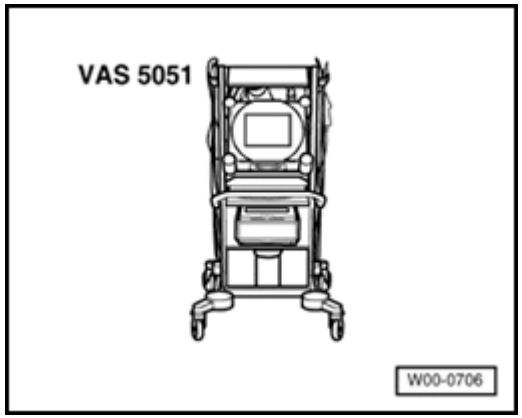

- VAS5051 with VAG5051/1

or

- VAG1551 with VAG1551/3A

Test requirement:

- Coolant Temperature at least 80 ° C.

cardiagn.com

24-84

Test sequence

- Connect VAS5051 tester or VAG1551 scan tool and select control module for engine electronics using "address word" 01 ⇒ Page 01-10 . Engine must run at idle.

Rapid data transfer	HELP
Select function XX	

When indicated on display

- Press buttons -0- and -4- to select "Initiate basic setting" and press -Q- button to confirm input.

Basic Setting	Q
Enter display group number XXX	

When indicated on display

- Press buttons -0-, -3- and -4- to select "display group number 034" and press -Q- button to confirm input.

System in basic setting 34			→
1	2	3	4

When indicated on display

- Use VAG1788/10 RPM adjuster to adjust engine speed to between 1800 and 2200 RPM.
- Check specified value in display field 4:

Note:

This process can take a few minutes.

cardiagn.com

24-85

	Display fields			
	1	2	3	4
Display group 034: Diagnostic oxygen sensor aging				
Display	xxxx/min	xxx °C	**x.x s**	**---**
Indicated	Engine speed (RPM)	Exhaust temperature	**Period duration Oxygen sensor before Catalytic converter**	Diagnostic condition
Functional range				**Test OFF** **Test ON** **B1-S2 OK** **B1-S2 not OK**
Specified value	1800 to 2200 RPM	more than 350 °C	**0.0 to 1.0 s**	B1-S2 OK
Note			**If specified value is not obtained ⇒Continuation, ⇒ Page 24-86**	

Note for display field 2:

Calculated value from engine speed and engine load.

Note for display fields 3 and 4:

Period duration is the time between two oxygen sensor voltage jumps (e.g. rich - lean - rich) and is therefore a measurement of the aging condition of the oxygen sensor. If the specified time is exceeded, display field 4 will indicate = B1-S1 not OK.

cardiagn.com

24-86

Continuation

If specified value in display field 3 and 4 is not obtained:

- Road test vehicle in order to free oxygen sensor of possible residue and repeat test.

If specified value in display field 3 and 4 is not obtained, even after road test:

- Replace Heated Oxygen Sensor (HO2S) - G39-.

cardiagn.com

24-87

Heated Oxygen Sensor (HO2S) and oxygen sensor control after Three Way Catalytic Converter (TWC), checking

Note:

Oxygen sensor control behind catalytic converter is superior to oxygen sensor control before catalytic converter and is responsible for control correction.

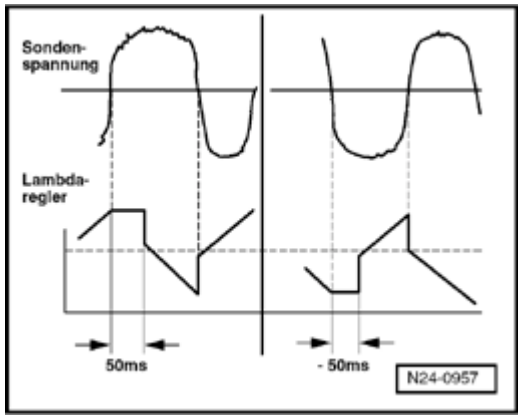

It corrects slight changes in the mixture (i.e. enrichment) via the oxygen sensor before catalytic converter by holding oxygen sensor control before catalytic converter at its higher or lower point for a specific time (dwell time). If this time is in the positive range (i.e. 50 ms), mixture is shifted in the -enrich- direction. If it is in the negative range (e.g. -50 ms), mixture will be shifted in the -lean- direction.

cardiagn.com

24-88

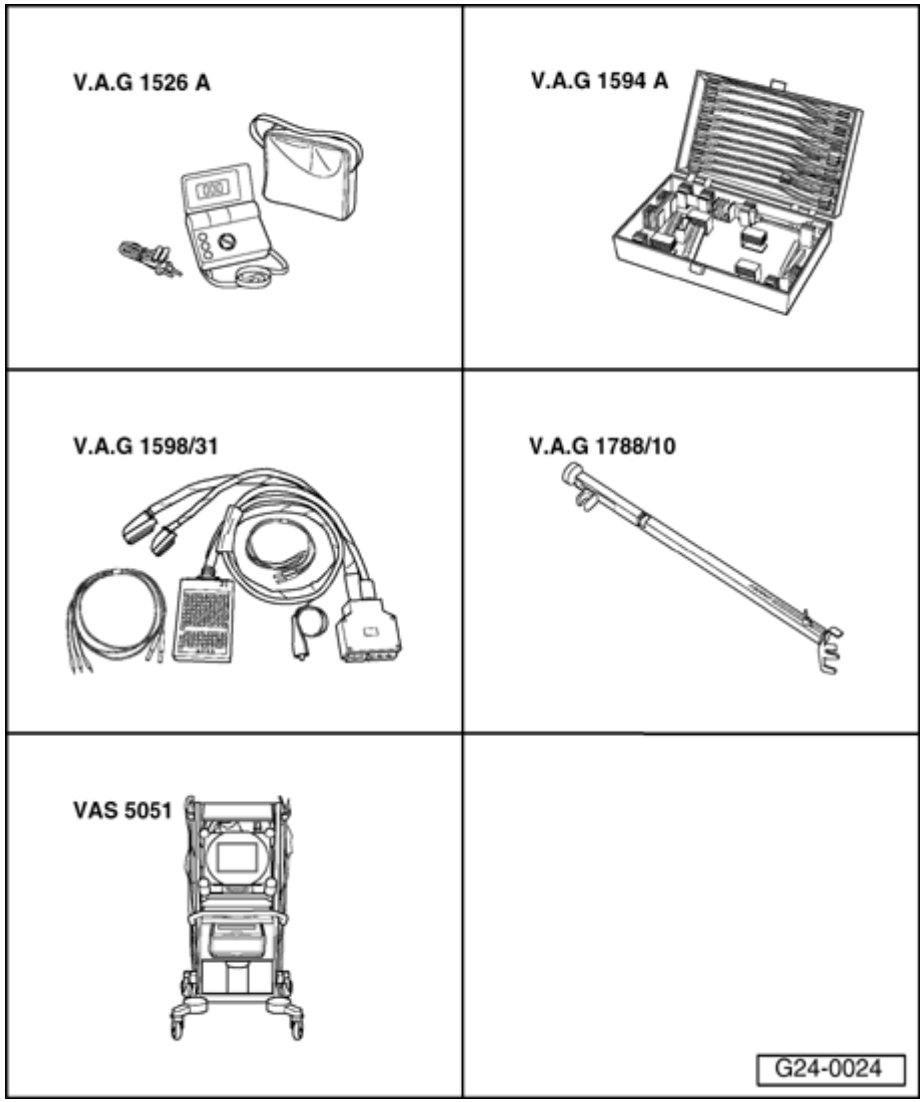

Special tools and equipment

- VAG1526A
- VAG1594A
- VAG1598/31
- VAG1788/10 RPM adjuster
- VAS5051 with VAG5051/1

- or

- VAG1551 with VAG1551/3A

cardiagn.com

24-89

Test requirements:

- Road test performed and DTC memory erased.
- Coolant Temperature at least 80 ° C.

Test sequence

- Connect VAS5051 tester or VAG1551 scan tool and select control module for engine electronics using "address word" 01 ⇒ Page 01-10 . Engine must run at idle.

Rapid data transfer	**HELP**
Select function XX	

When indicated on display

- Press buttons -0- and -4- to select "Initiate basic setting" and press -Q- button to confirm input.

Note:

During basic setting, the Evaporative Emission (EVAP) canister purge regulator valve (EVAP valve -N80-) is closed and the A/C compressor is switched off

Basic Setting	**Q**
Enter display group number XXX	

When indicated on display

- Press buttons -0-, -3- and -4- to select "display group number 034" and press -Q- button to confirm input.

cardiagn.com

24-90

System in basic setting 34 →
1 2 3 4

When indicated on display

- Use VAG1788/10 RPM adjuster to adjust engine speed to between 2800 and 3200 RPM.
- Continue test as soon as display field 2 indicates an exhaust temperature of more than 350 ° C.

Note:

This process can take a few minutes.

- Press -C- button.
- Use VAG1788/10 RPM adjuster to adjust engine speed to between 1800 and 2200 RPM.

Basic Setting **Q**
Enter display group number XXX

When indicated on display

- Press buttons -0-, -3- and -0- to select "display group number 030" and press -Q- button to confirm input.

System in basic setting 30 →
1 2 3 4

When indicated on display

- Check oxygen sensor status for oxygen sensor behind catalytic converter in display field 2.

Note:

"Oxygen sensor status" indicates status of oxygen sensor control and oxygen sensor.

cardiagn.com

24-91

	Display fields			
	1	2	3	4
Display group 030: Oxygen sensor status with engine at idle				
Display	X X X	**X X X**		
Indicated	Oxygen sensor status, bank 1, sensor 1	**Oxygen sensor status Bank 2, sensor 1**		
Functional range	0 = off 1 = on	**0 = off** **1 = on**		
Specified value	1 1 1	**1 1 0**		
Note	**If specified value is not obtained ⇒ Page 24-99**			

Significance of 3 digit indications in display group 030			
X	X	X	**Display fields 1 and 2**
		X	Oxygen sensor control: 0= not active; 1 = active
	X		Operational readiness of oxygen sensor: 0= not active; 1 = active
X			Condition of oxygen sensor heater: 0= not active; 1 = active

Note:

- *Oxygen sensor control of oxygen sensor behind catalytic converter (B1-S2) is not active without engine load.*
- *The first position of the 3 digit indication (heating) fluctuates between 0 and 1.*

cardiagn.com

24-92

Checking oxygen sensor control behind catalytic converter

- Press -C- button.

Basic Setting	Q
Enter display group number XXX	

When indicated on display

- Press buttons -0-, -3- and -7- to select "display group number 037" and press -Q- button to confirm input.

System in basic setting 37			→
1	2	3	4

When indicated on display

- Check oxygen sensor voltage in display field 2.
- Check dwell time of oxygen sensor control before catalytic converter in display field 3 and diagnostic result in display field 4.

cardiagn.com

24-93

	Display fields			
	1	2	3	4
Display group 037: Diagnostic oxygen sensor control system				
Display	xxx %	**x.xxx volts**	**xxx ms**	**---**
Indicated	Engine load	**Oxygen sensor voltage Bank 2, sensor 1**	**Dwell time, oxygen sensor control before catalytic converter, bank 1**	Diagnostic condition
Functional range				**Test OFF** **Test ON** **System OK** **System not OK**
Specified value	15 to 33 %	**0.100 to 0.900 V**	**-150 to 150 ms**	System OK
Note		**If specified value is not obtained: Evaluation display field 2 ⇒ Page 24-94**	**If value climbs to above 300 ms, this indicates a leaking exhaust system or faulty oxygen sensor**	**If "SYST not OK" is displayed: Check DTC memory ⇒ Page 01-16**

Note for display field 3:

Oxygen sensor control behind catalytic converter is superior to oxygen sensor control before catalytic converter and is responsible for control correction. It corrects slight changes in the mixture (i.e. toward rich or lean) due to the oxygen sensor before catalytic converter by holding oxygen sensor control before catalytic converter at its higher or lower point for a specific time (dwell time). If this time is in the positive range (i.e. 50 ms), mixture is shifted in the -enrich- direction. If this time is in the negative range (i.e. -50 ms), mixture is shifted in the -lean- direction.

cardiagn.com

Evaluation display group 037

Display field: 2	Possible cause	Corrective action
constant about 0.450 V	♦ Open circuit in wire 4 between oxygen sensor and control module	- Check primary voltage ⇒ Page 24-96
	♦ Open circuit in wire 3 between oxygen sensor and control module	
larger than 1.100 V	♦ Short circuit to B+ in wire 4 between oxygen sensor and control module	- Check oxygen sensor wiring, oxygen sensor behind catalytic converter ⇒ Page 24-97
smaller than 0.150 V	♦ Short circuit to Ground (GND) in wire 4 between oxygen sensor and control module	

cardiagn.com

24-95

Continuation

If specified value in display field 3 and 4 is not obtained:

- Road test vehicle in order to free oxygen sensor of possible residue and repeat test.

If specified value in display field 3 and 4 is not obtained, even after road test:

- Replace Heated Oxygen Sensor (HO2S) - G39-.

Note:

If oxygen sensor voltage is OK and dwell time of oxygen sensor control behind catalytic converter is still above 1200 ms, even after a road test, this suggests aging of the oxygen sensor before catalytic converter.

cardiagn.com

24-96

Checking primary voltage

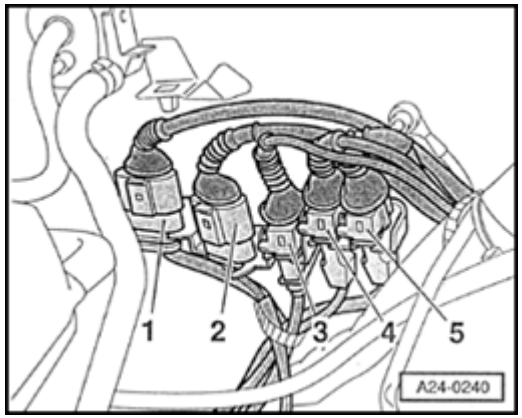

- Disconnect 4-pin harness connector -1- (brown) to Oxygen Sensor (O2S) behind Three Way Catalytic Converter (TWC) -G130-.

Note:

Coolant reservoir screws must be removed and coolant reservoir must be placed to side in order to access the harness connector. The coolant hoses can remain connected.

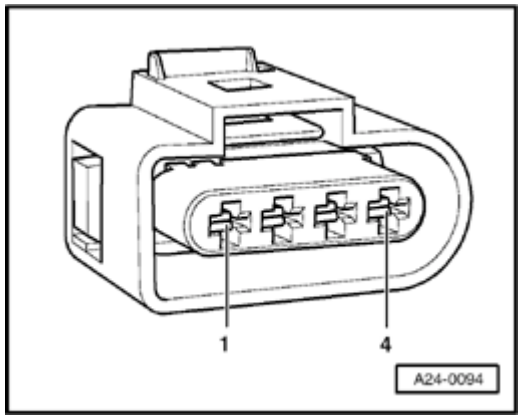

- Connect multimeter between terminal 3 and 4 for voltage measurement.
- Switch ignition on.
  - ♦ Specification: 0.400 to 0.500 V
- Switch ignition off.

If specified value is not obtained:

- Check oxygen sensor wiring.

If specified value is obtained:

- Replace Oxygen Sensor (O2S) behind Three Way Catalytic Converter (TWC) -G130-.

cardiagn.com

24-97

Checking oxygen sensor wires

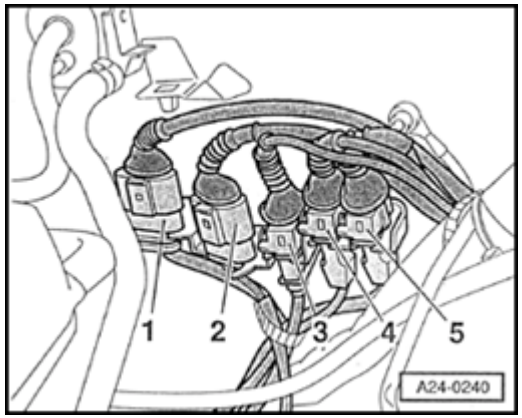

- Disconnect 4-pin harness connector -1- (brown) to Oxygen Sensor (O2S) behind Three Way Catalytic Converter (TWC) -G130-.

Note:

Coolant reservoir screws must be removed and coolant reservoir must be placed to side in order to access the harness connector. The coolant hoses can remain connected.

- Connect VAG1598/31 test box at wiring harness to Engine Control Module (ECM), do not connect ECM ⇒ Page 24-19 .

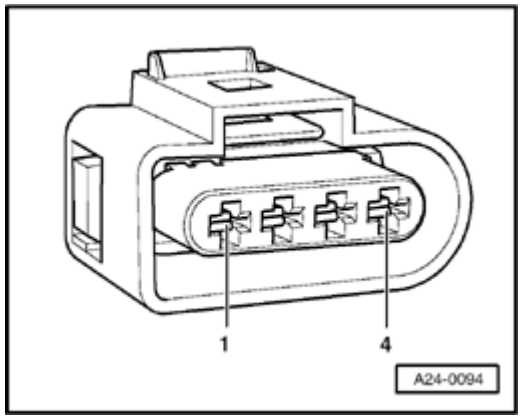

- Check following wire connections for open circuit.

Harness connector Terminal	VAG1598/31 test box Socket
3	68
4	69

cardiagn.com

24-98

- Repair open circuit if necessary.

- Check wires to each other for short circuit.

If wire connection is OK:

- Replace Engine Control Module (ECM) ⇒ Page 24-23

cardiagn.com

24-99

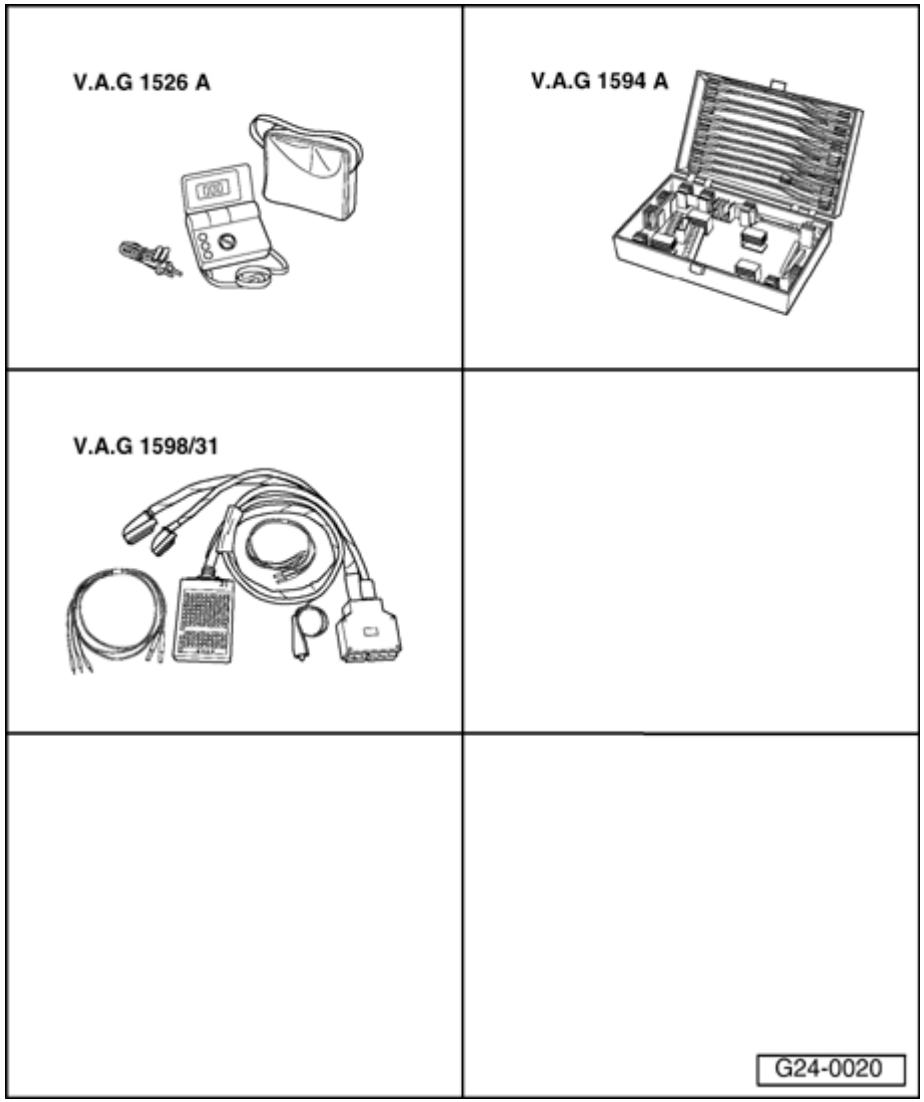

Oxygen Sensor (O2S) heater -Z19- and oxygen sensor heater 1 -Z29- for oxygen sensor before catalytic converter and oxygen sensor behind catalytic converter, checking

Special tools and equipment

- VAG1526A
- VAG1594A
- VAG1598/31

cardiagn.com

24-100

Test requirements:

- Coolant Temperature at least 80° C.
- Fuse for oxygen sensor heating OK

⇒ *Electrical Wiring Diagrams, Troubleshooting & Component Locations*

Test sequence

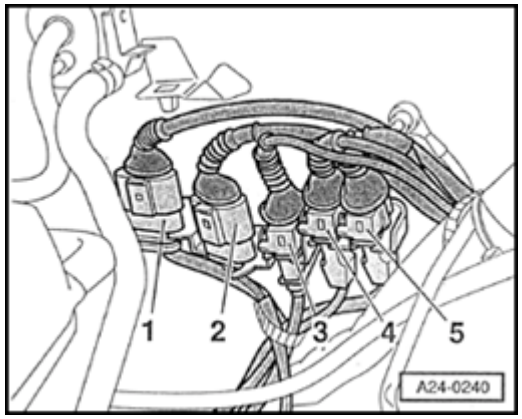

- Disconnect 4-pin harness connector -2- (black) to Heated Oxygen Sensor (HO2S) -G39- before catalytic converter.

or

- Disconnect 4-pin harness connector -1- (brown) to Oxygen Sensor (O2S) behind Three Way Catalytic Converter (TWC) -G130-.

Note:

Coolant reservoir screws must be removed and coolant reservoir must be placed to side in order to access the harness connector. The coolant hoses can remain connected.

cardiagn.com

24-101

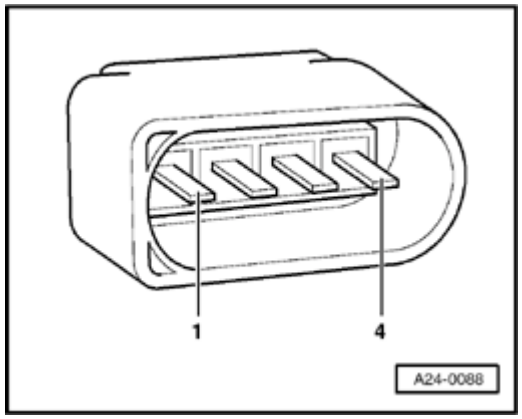

- Connect multimeter between terminal 1 and 2 for resistance measurement.
  - Specified value at room temperature: 1 to 5 Ω

Note:

At higher temperatures, resistance climbs sharply.

If specified value is not obtained:

- Replace Oxygen Sensor (O2S).

If specified value is obtained:

- Check voltage supply of oxygen sensor heating ⇒ Page 24-101 .

Checking voltage supply for oxygen sensor heating

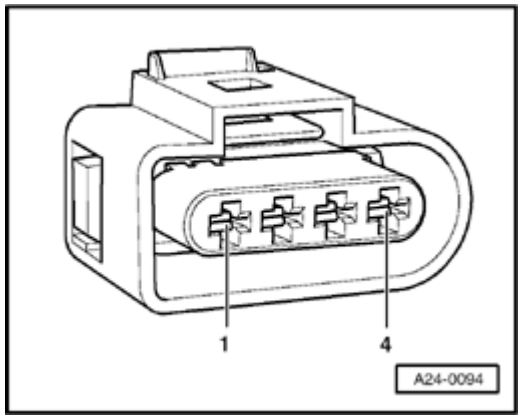

- Connect multimeter between terminal 1 (B+) and 2 (Ground -GND-) for voltage measurement.

cardiagn.com

24-102

- Start engine.

  - Specification: approx. battery voltage, possibly fluctuating

Note:

- *At certain operating points, the ECM "pulses" the Ground (GND) for oxygen sensor heating. This means that the Ground (GND) is constantly switched on and off at these points. It is therefore possible that the voltage displayed on the tester will fluctuate.*

- *When the ECM switches oxygen sensor heating on and off can be observed, if necessary, via the function "read measuring value block" display group number 041.*

If there is no voltage:

- Connect multimeter for voltage measurement as follows:

Harness connector Terminal	Measure to
1 (B+)	Vehicle Ground (GND)

cardiagn.com

- Operate starter briefly.

  - Specification: approx. battery voltage

cardiagn.com

24-103

If there is no voltage again:

- Check wire connection from terminal 1 of connector to Fuel Pump (FP) relay via fuse for open circuit:

⇒ *Electrical Wiring Diagrams, Troubleshooting & Component Locations*

If voltage supply is OK:

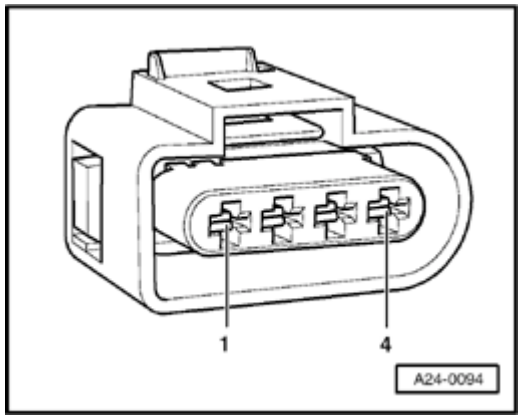

- Connect multimeter for voltage measurement as follows:

Harness connector **Terminal**	**Measure to**
2 (Ground -GND- activation of Engine Control Module -ECM-)	B+

- Start engine.
  - ♦ Specification: approx. battery voltage, possibly fluctuating
- Switch ignition off.

If there is no voltage:

- Connect VAG1598/31 test box at wiring harness to Engine Control Module (ECM), do not connect ECM ⇒ Page 24-19 .

cardiagn.com

24-104

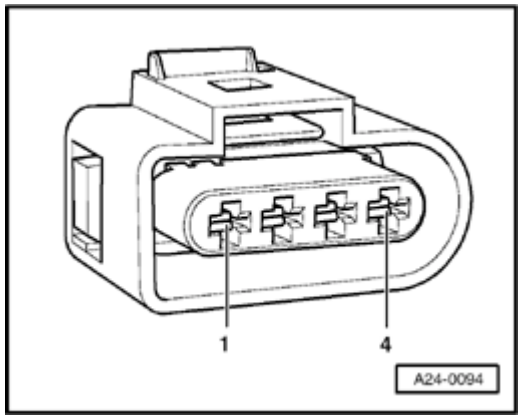

- Check following wire connection for open circuit:

Oxygen Sensor (O2S) heater -Z19- for oxygen sensor before catalytic converter:

Harness connector Terminal	VAG1598/31 test box Socket
2	5

Oxygen sensor heater 1 -Z29- for oxygen sensor behind catalytic converter:

Harness connector Terminal	VAG1598/31 test box Socket
2	63

- Repair open circuit if necessary.

If wire connection is OK, but there is no Ground (GND) supply for oxygen sensor heating:

- Replace Engine Control Module (ECM) ⇒ Page 24-23

cardiagn.com

24-105

Oxygen sensor, removing and installing

Special tools and equipment

- 3337 wrench, 7-piece set
- Locking compound G 052 112 A3

Procedure

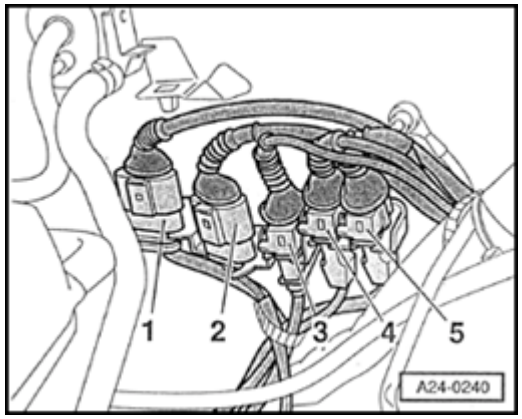

- Disconnect 4-pin harness connector of oxygen sensor and lay it to side.

1 - (brown) for Oxygen Sensor (O2S) behind Three Way Catalytic Converter (TWC) -G130-

2 - (black) for Heated Oxygen Sensor (HO2S) -G39- before catalytic converter

Note:

Coolant reservoir screws must be removed and coolant reservoir must be placed to side in order to access harness connectors. The coolant hoses can remain connected.

- Unscrew oxygen sensor using special tool 3337.

cardiagn.com

24-106

When installing:

Note:

- *Oxygen sensor threads are coated with an assembly paste. This paste must not contact sensor openings.*
- *Tightening torque: 55 Nm*
- *Cable of oxygen sensor must always be secured in the same position when installing so that contact with the exhaust pipe is avoided.*

cardiagn.com

24-107

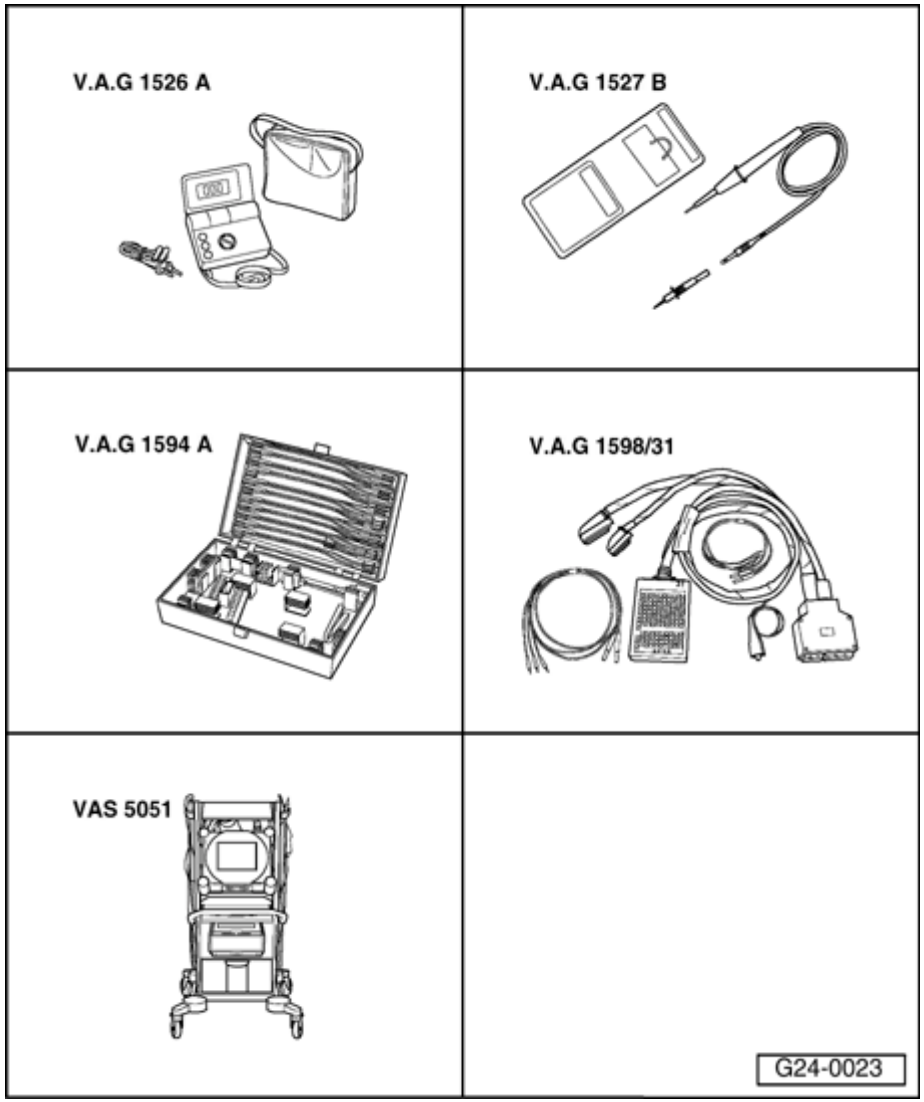

Tank ventilation, checking

Evaporative Emission (EVAP) canister purge regulator valve -N80-, checking

Special tools and equipment

- VAG1526A
- VAG1527B
- VAG1594A
- VAG1598/31
- VAS5051 with VAG5051/1

- or

- VAG1551 with VAG1551/3A

cardiagn.com

24-108

Checking for proper seal

When there is no current, the Evaporative Emission (EVAP) canister purge regulator valve -N80- is closed.

- Disconnect hoses from EVAP valve; harness connector remains connected.

- Attach assisting hose to one connection of EVAP valve.

- Connect VAS5051 tester or VAG1551 scan tool and select control module for engine electronics using "address word" 01 ⇒ Page 01-10 . Ignition must remain switched on.

- Initiate output DTM and activate Evaporative Emission (EVAP) canister purge regulator valve -N80- ⇒ Page 01-49 .

Output Diagnostic Test Mode (DTM) →

EVAP canister purge regulator valve -N80-

< Indicated on display(or, indicated: tank ventilation valve -N80-)

- Valve must click...
- ...and must open and close (can be tested by blowing into assisting hose).

cardiagn.com

If valve does not click:

- Check internal resistance of EVAP valve.

If valve does not open or close properly:

- Replace Evaporative Emission (EVAP) canister purge regulator valve -N80-.

Checking internal resistance

- Disconnect connector at EVAP valve.

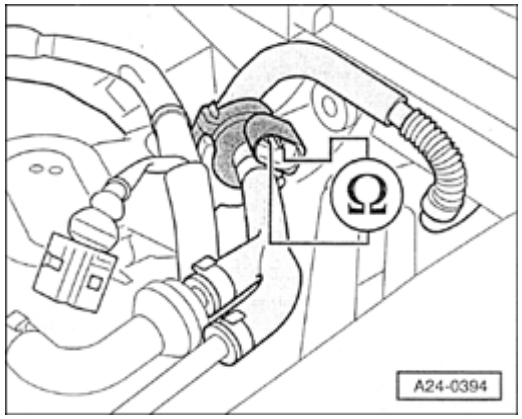

- Connect multimeter at valve for resistance measurement.
  - Specification: 22 to 30 Ω

If specified value is not obtained:

- Replace Evaporative Emission (EVAP) canister purge regulator valve -N80-.

If specified value is obtained:

- Check voltage supply ⇒ Page 24-110 .

cardiagn.com

24-110

Checking voltage supply

Test requirements:

- Fuse for the EVAP valve OK.

⇒ *Electrical Wiring Diagrams, Troubleshooting & Component Locations*

- Fuel Pump (FP) relay OK; checking ⇒ Page 24-53 .

Note:

Voltage is supplied to the EVAP valve via the Fuel Pump (FP) relay.

- Disconnect connector at EVAP valve.

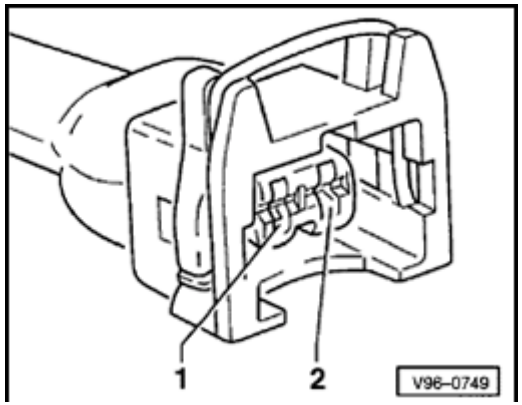

- Connect VAG1527B voltage tester as follows:

Harness connector Terminal	Measure to
1	Engine Ground (GND)

- Operate starter briefly (engine can also start).
  - ♦ LED must light up.

cardiagn.com

24-111

If LED does not light up:

- Check wire connection from terminal 1 of connector to Fuel Pump (FP) relay via fuse for open circuit:

⇒ *Electrical Wiring Diagrams, Troubleshooting & Component Locations*

- Repair open circuit if necessary.

If LED lights up:

- Checking activation.

Checking activation

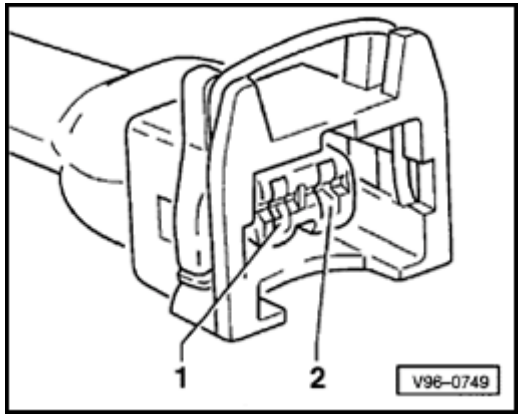

- Connect VAG1527B voltage tester to connector terminals 1 (B+) and 2.
- Initiate output DTM and activate Evaporative Emission (EVAP) canister purge regulator valve -N80- ⇒ Page 01-49 .
  - LED must blink.

cardiagn.com

If LED does not blink or if it remains constantly lit:

- Connect VAG1598/31 test box at wiring harness to Engine Control Module (ECM), do not connect ECM ⇒ Page 24-19 .

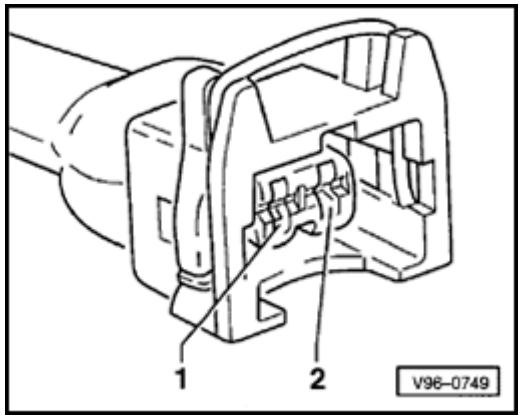

- Check following wire connection for open circuit and short circuit to Ground (GND) and B+:

Harness connector Terminal	VAG1598/31 test box Socket
2	64

- Repair open circuit or short circuit if necessary.

If wire connection is OK:

- Replace Engine Control Module (ECM) ⇒ Page 24-23

cardiagn.com

24-113

Electronic Engine Power Control (EPC) (E-Gas), checking

E-Gas system, function

For E-Gas, the throttle valve is not operated by a cable from the accelerator pedal. There is no mechanical connection between the accelerator pedal and the throttle valve.

The position of the accelerator pedal is communicated to the Engine Control Module (ECM) via two sensors for accelerator pedal position (variable resistances; stored in one housing) that are connected with the accelerator pedal.

The accelerator pedal position (driver's intention) is a main input unit for the ECM.

Operation of the throttle valve occurs via an electric motor (throttle valve actuator) in the throttle valve control module. This is true across the entire engine speed and engine load spectrum.

The throttle valve is operated by the throttle valve actuator according to the instructions of the ECM.

With ignition switched on and engine off, the

cardiagn.com

ECM activates the throttle valve actuator precisely according to the sensor for accelerator pedal position. This means, if the accelerator pedal is depressed half way, the throttle valve actuator opens the throttle valve to the same degree; i.e. throttle valve would be opened half way.

cardiagn.com

24-114

With engine running (under load), the ECM can open or close the throttle valve independently of the sensor for accelerator pedal position.

This means, for example, that the throttle valve could be fully opened even though the accelerator pedal has only been depressed half way. This has the advantage of preventing torque losses at the throttle valve.

In addition to this, it results in significantly better values relative to emissions and consumption under certain load conditions.

The required engine torque can be achieved by the Engine Control Module (ECM) via the optimal combination of throttle valve diameter and boost pressure.

It would be incorrect to think that "E-Gas" consists of only one or two component. E-Gas is much more of a system containing all components that contribute to recognizing, controlling and monitoring the position of the throttle valve, e.g. sensor for accelerator pedal position, throttle valve control module, EPC warning lamp, Engine Control Module (ECM).

cardiagn.com

24-115

Electronic Power Control (EPC) warning lamp in instrument cluster

Note:

The Electronic Power Control (EPC) warning lamp -K132- is also called the fault light for power accelerator activation.

"EPC" is an abbreviation and stands for Electronic Power Control (E-gas).

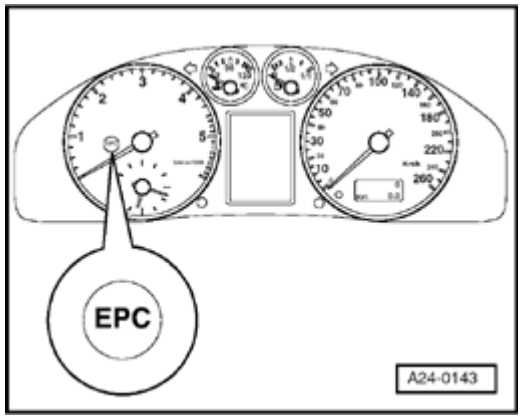

Installation location of EPC warning lamp

Engine Control Module (ECM) checks all components that are important for function of the E-Gas system after ignition is switched on.

The Engine Control Module (ECM) switches on the EPC warning lamp after ignition is switched on. Shortly after engine is started, the EPC warning lamp will go out. This requires, first of all, that the Engine Control Module (ECM) does not detect a malfunction in the E-gas system and, secondly, that activation of the lamp by the Engine Control Module (ECM) is OK.

If malfunctions are recognized in the E-Gas system during operation of the engine, the ECM switches on the EPC warning lamp in instrument cluster. (These malfunctions are listed in the DTC table). An entry is made in DTC memory at the same time.

cardiagn.com

24-116

Electronic Power Control (EPC) warning lamp -K132-, checking

Note:

The fault light for power accelerator activation -K132- is also called the EPC warning lamp.

Special tools and equipment

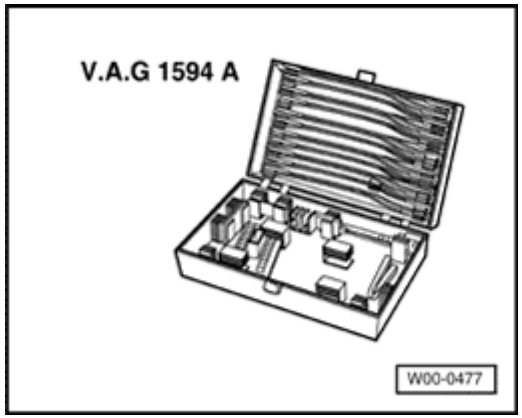

- VAG1594A

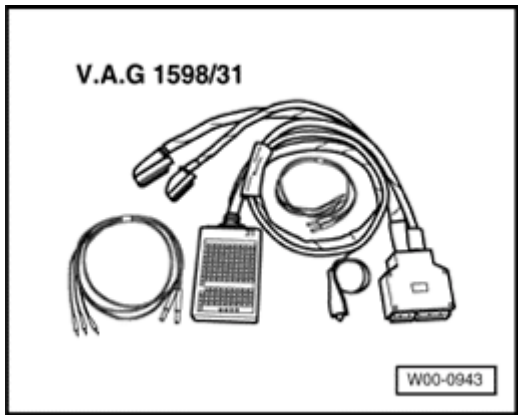

- VAG1598/31

cardiagn.com

24-117

Function test of warning lamp

- Switch ignition on.

  - The EPC warning lamp must light up for approximately 3 seconds if there are no malfunctions stored in DTC memory that relate to the E-gas system

A- Fault light for power accelerator activation -K132- does not light up

- Connect VAG1598/31 test box at wiring harness to Engine Control Module (ECM), do not connect ECM ⇒ Page 24-19 .

- Bridge terminals 1 and 48 at test box using wires from VAG1594A adapter test kit.

- Switch ignition on.

  - Warning lamp must light up.

If warning lamp does not light up:

- Switch ignition off.

- Remove instrument cluster:

cardiagn.com

⇒ *Repair Manual, Electrical Equipment, Repair Group 90, Instrument cluster, removing and installing*

cardiagn.com

- Check following wire connection for open circuit and short circuit to B+:

Test box VAG1598/31 Socket	Instrument cluster Terminal
48	⇒ *Electrical Wiring Diagrams, Troubleshooting & Component Locations*

- Repair open circuit or short circuit if necessary.

If wire connection is OK:

- Replace Engine Control Module (ECM) ⇒ Page 24-23

cardiagn.com

24-119

B- Fault light for power accelerator activation -K132- lights up constantly

- Check DTC memory of Engine Control Module (ECM) ⇒ Page 01-16 .

If no DTCs are stored:

- Connect VAG1598/31 test box at wiring harness to Engine Control Module (ECM), do not connect ECM ⇒ Page 24-19 .

- Remove instrument cluster:

⇒ *Repair Manual, Electrical Equipment, Repair Group 90, Instrument cluster, removing and installing*

- Check following wire connection for short circuit to Ground (GND):

Test box VAG1598/31 Socket	Instrument cluster Terminal
48	⇒ *Electrical Wiring Diagrams,*

cardiagn.com

	Troubleshooting & Component Locations

- Repair short circuit if necessary.

If wire connection is OK:

- Replace Engine Control Module (ECM) ⇒ Page 24-23

cardiagn.com

24-120

Throttle valve control module -J338-, checking

The following components are located in the housing for the throttle valve control module:

- Throttle drive (power accelerator actuation) -G186-. (This is an electric motor that is activated by the ECM. This electric motor opens the throttle valve against spring pressure.)
- Angle sensor -1- for throttle drive (power accelerator actuation) -G187-
- Angle sensor -2- for throttle drive (power accelerator actuation) -G188-

Note:

- *The housing for the throttle valve control module must not be opened.*
- *The angle sensors are designed as potentiometers (variable resistances). They communicate the position of the throttle valve to the Engine Control Module (ECM) fully independent of each other.*
- *The potentiometers cannot be mechanically*

cardiagn.com

adjusted. Adjustment is performed in basic setting (function 04) using the VAS5051 tester or the VAG1551 Scan Tool (ST).

cardiagn.com

24-121

Throttle valve control module, adapting

The adaptation teaches the Engine Control Module (ECM) various positions of the throttle valve when the ignition is on and the engine is stopped. These positions are stored in the control module The return communication regarding the position of the throttle valve occurs via the two angle sensors for throttle drive.

An adaptation must always be performed when the throttle valve control module -J338- or the Engine Control Module (ECM) are removed and installed (or replaced) or if voltage supply to the Engine Control Module (ECM) is interrupted.

The learning process (adaptation) occurs:

- automatically if the ignition is switched on for at least 10 seconds without operating starter and accelerator pedal and the Engine Control Module (ECM) recognizes "adaptation required". (There will be no notification of whether adaptation was successful or not however). Adaptation required is recognized if stored voltage values from the angle sensors do not match actual measured voltage values within a certain tolerance range.

- via initiation of basic setting (function 04) display group 060 with ignition on.

cardiagn.com

24-122

Note:

Engine will not start during automatic adaptation.

Special tools and equipment

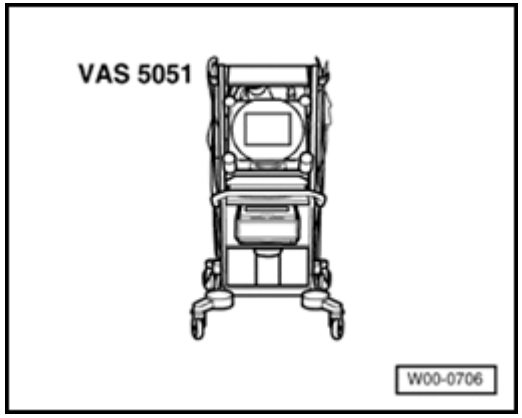

- VAS5051 with VAG5051/1

or

- VAG1551 with VAG1551/3A

Requirements

- No DTCs in DTC memory, check DTC memory ⇒ Page 01-16 .
- Engine not running, ignition switched on.
- Accelerator pedal not depressed.
- Coolant temperature 10 to 95 ° C.
- Intake air temperature 10 to 90 ° C.
- Supply voltage for Engine Control Module (ECM) more than 12.7 volts; checking ⇒ Page 28-36 .

cardiagn.com

24-123

Procedure

- Connect VAS5051 tester or VAG1551 scan tool and select control module for engine electronics using "address word" 01 ⇒ Page 01-10 . Ignition must remain switched on.

Rapid data transfer	**HELP**
Select function XX	

When indicated on display

- Press buttons -0- and -4- to select "Initiate basic setting" and press -Q- button to confirm input.

Basic Setting	**Q**
Enter display group number XXX	

When indicated on display

- Press buttons -0-, -6- and -0- to select "display group number 060" and press -Q- button to confirm input.

After pressing Q-button, throttle valve actuator will be switched on without current.

In this condition, the throttle valve will be drawn into an emergency position by a mechanical spring, which is located in the throttle valve control module. The values supplied by the two angle sensors in this emergency position are stored by the Engine Control Module (ECM).

cardiagn.com

24-124

Next, the throttle valve is opened by a certain value. If this value is reached, the throttle valve actuator is once again de-energized. Now, the mechanical spring must close the throttle valve to the previously learned emergency position within a specified time (spring test).

Then, the throttle valve is closed by the throttle valve actuator; the values supplied by the angle sensors in the throttle valve control unit are stored by the Engine Control Module (ECM).

If Engine Control Module (ECM) should de-energize throttle valve actuator during driving operation, this is expressed by an increased, surging idle speed (RPM). The engine accepts gas only after great delay.

System in basic setting 60 →

1 2 3 4

When indicated on display

- Check specified values for throttle valve control module in display fields 3 and 4.

cardiagn.com

24-125

	Display fields			
	1	2	3	4
Display group 060: Adaptation of throttle valve control module				
Display	xx %	xx %	**x**	**---**
Indicated	Throttle valve angle (angle sensor 1)	Throttle valve angle (angle sensor 2)	**Adaptation step counter**	**Adaptation condition**
Functional range			**0 to 8**	**ADP in progress** **ADP OK** **ERROR**
Specified value	3 to 93 %	97 to 3 %	**8**	**ADP OK**
Note			**After adaptation, the adaptation step counter reaches the number 8 (it is OK for numbers to be skipped).**	**If "ERROR." is displayed: Check DTC memory ⇒ Page 01-16 .** **If specified value is not obtained: ⇒Note, ⇒ Page 24-126**

Note:

The abbreviation "ADP" in display field 4 stands for "Adaptation".

cardiagn.com

24-126

Note:

The control module can abort adaptation for the following reasons:

- *Throttle valve cannot be closed completely (e.g. contamination).*
- *Battery voltage is too low.*
- *Throttle valve control module or wire connection is faulty.*
- *Engine is started during adaptation or accelerator pedal is operated.*
- *Tension of throttle valve housing (check bolts).*

After termination, tester displays "Function is unknown or cannot be performed at the moment". The next time the ignition is switched on (several seconds), adaptation will be automatically repeated.

- End basic adjustment of the engine by pressing the→ key.

Rapid data transfer	**HELP**

Indicated on display (function selection):

cardiagn.com

Select function XX

cardiagn.com

24-127

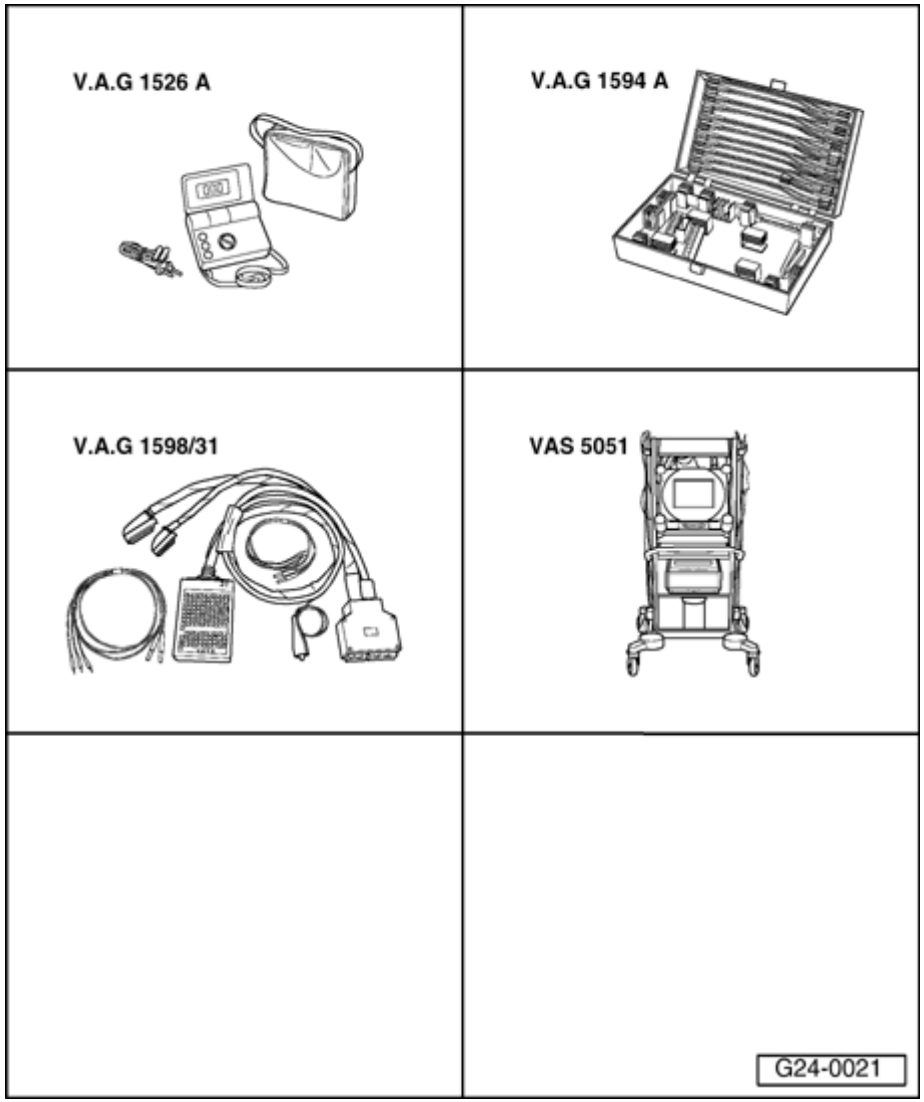

Angle sensor -1- for throttle drive, checking

Special tools and equipment

- VAG1526A
- VAG1594A
- VAG1598/31
- VAS5051 with VAG5051/1

- or

- VAG1551 with VAG1551/3A

cardiagn.com

24-128

Angle sensor 1 for throttle drive (power accelerator actuation) -G187- and angle sensor 1 for throttle drive (power accelerator actuation) -G188- inform the Engine Control Module (ECM) about the position of the throttle valve. Both angle sensors are located in the throttle valve control module.

Test sequence

- Connect VAS5051 tester or VAG1551 scan tool and select control module for engine electronics using "address word" 01 ⇒ Page 01-10 . Ignition must remain switched on.

Rapid data transfer	**HELP**
Select function XX	

When indicated on display

- Press buttons -0- and -8- to select "Read Measuring Value Block" and press -Q- button to confirm input.

Read measuring value block	**Q**
Enter display group number XXX	

When indicated on display

- Press buttons -0-, -6- and -2- to select "display group number 062" and press -Q- button to confirm input.

Read Measuring Value Block 62			→
1	**2**	**3**	**4**

Indicated on display

- Check specified values for E-gas potentiometer voltages in display fields 1 and 2.

cardiagn.com

24-129

	Display fields			
	1	2	3	4
Display group 062: E-Gas potentiometer voltages				
Display	**xx %**	**xx %**	xx %	xx %
Indicated	**Throttle valve angle (angle sensor 1)**	**Throttle valve angle (angle sensor 2)**	Sensor 1 for Pedal position	Sensor 2 for Pedal position
Specified value	**3 to 93 %**	**97 to 3 %**	12 to 97 %	4 to 49 %

Note:

Engine Control Module (ECM) calculates the voltage values of the angle sensors in percent relative to 5 volts and displays these percentage values. (5 volts supply voltage represents 100 %).

- Observe display field 1 and 2.

- Slowly depress accelerator pedal completely.

Percent indication in display field 1 must rise uniformly. In the process, the tolerance range of 3 to 93% is not completely utilized.

Percent indication in display field 2 must decrease uniformly. The tolerance range 97 to 3 % is not used completely during this.

cardiagn.com

24-130

Note:

- *The reason why the value indicated in display field 1 climbs, while the value indicated in display field 2 decreases, has to do with the fact that the potentiometers (angle sensors) in the throttle valve control unit run in opposite directions.*

- *This means that the voltage tap of angle sensor 1 runs from 0 to 5 volts. (The more the throttle valve is opened, the larger the voltage; percent indication climbs).*

- *The voltage tap of angle sensor 2 runs from 5 to 0 volts. (The more the throttle valve is opened, the lower the voltage; the percentage decreases).*

If indications do not resemble description:

- Check voltage supply and wire connections of throttle valve control module ⇒ Page 24-131 . Pay particular attention to harness connectors that could be loose or corroded.

- Check accelerator pedal position sensor ⇒ Page 24-133 .

cardiagn.com

24-131

Check voltage supply throttle valve control module

- Pull connector -2- off throttle valve control module.

- Switch ignition on.

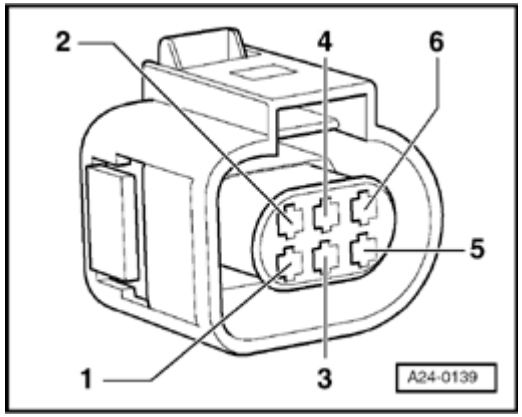

- Connect multimeter for voltage measurement as follows:

Harness connector Terminal	Specified value
2 + Ground (GND)	about 5 V
2 + 6	about 5 V

If specified values are not obtained:

- Check wire connections from Engine Control Module (ECM) to throttle valve control module ⇒ Page 24-132 .

cardiagn.com

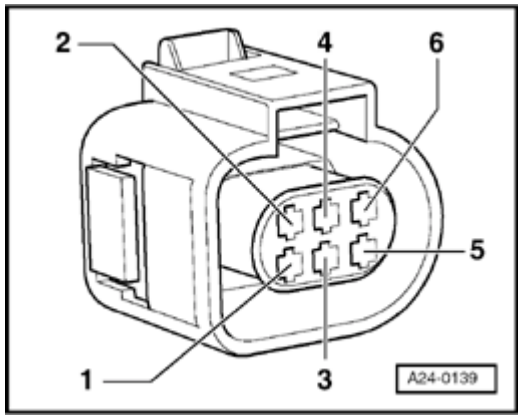

Checking wire connections

- Pull connector -2- off throttle valve control module.
- Connect VAG1598/31 test box at wiring harness to Engine Control Module (ECM), do not connect ECM ⇒ Page 24-19 .
- Check following wire connections for open circuit and short circuit to Ground (GND) and B+:

Harness connector Terminal	VAG1598/31 test box Socket
1	92
2	83
3	117
4	84
5	118
6	91

- Repair open circuit or short circuit if necessary.

If no malfunctions are found in wires:

- Replace throttle valve control module.

cardiagn.com

24-133

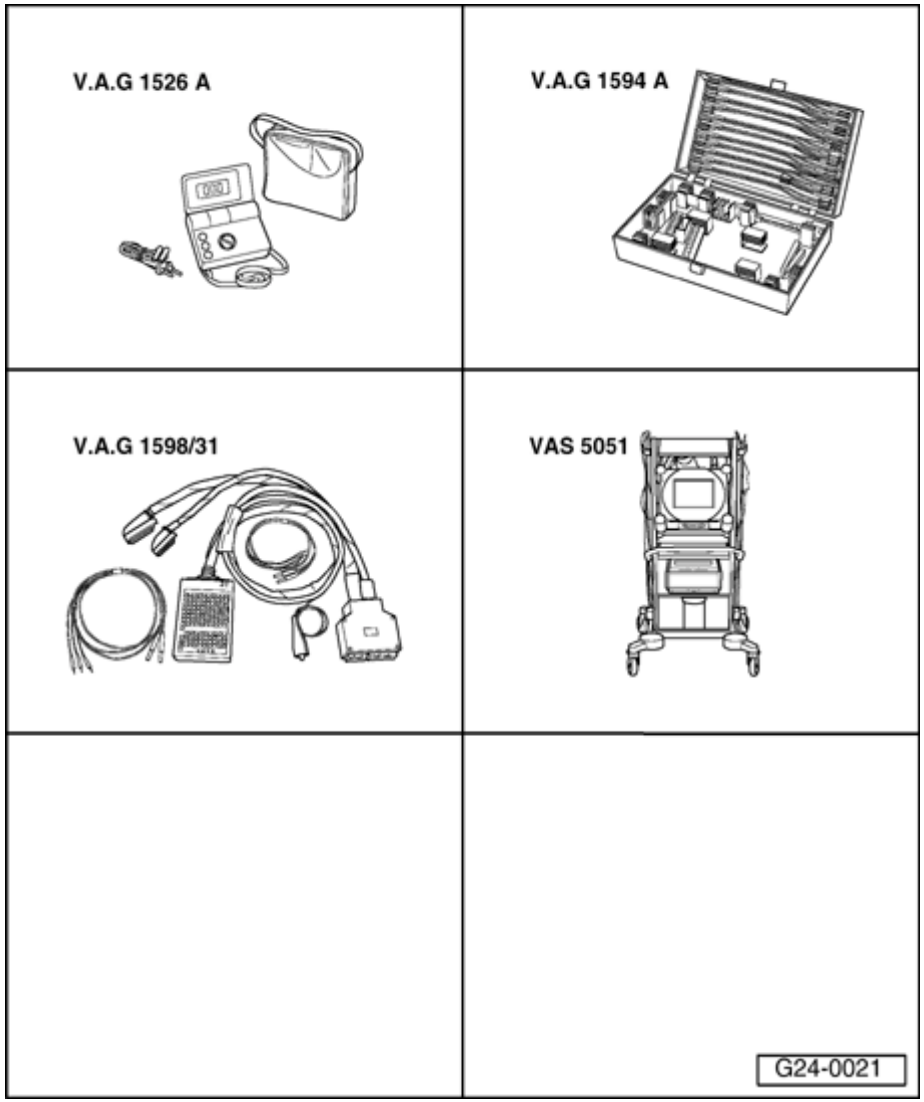

Throttle Position (TP) sensor, checking

Special tools and equipment

- VAG1526A
- VAG1594A
- VAG1598/31
- VAS5051 with VAG5051/1

- or

- VAG1551 with VAG1551/3A

cardiagn.com

24-134

Both the Throttle Position (TP) sensor -G79- and the Sender -2- for accelerator pedal position -G185- are located at the accelerator pedal and communicate the driver's intentions to the ECM completely independently of each other. Both sensors are stored in one housing.

Test sequence

- Connect VAS5051 tester or VAG1551 scan tool and select control module for engine electronics using "address word" 01 ⇒ Page 01-10 . Ignition must remain switched on.

Rapid data transfer	**HELP**
Select function XX	

When indicated on display

- Press buttons -0- and -8- to select "Read Measuring Value Block" and press -Q- button to confirm input.

Read measuring value block	**Q**
Enter display group number XXX	

When indicated on display

- Press buttons -0-, -6- and -2- to select "display group number 062" and press -Q- button to confirm input.

Read Measuring Value Block 62			→
1	**2**	**3**	**4**

Indicated on display

- Check specified values for E-gas potentiometer voltages in display fields 3 and 4.

cardiagn.com

24-135

	Display fields			
	1	2	3	4
Display group 062: E-Gas potentiometer voltages				
Display	xx %	xx %	**xx %**	**xx %**
Indicated	Throttle valve angle (angle sensor 1)	Throttle valve angle (angle sensor 2)	**Sensor 1 for Pedal position**	**Sensor 2 for Pedal position**
Specified value	3 to 93 %	97 to 3 %	**12 to 97 %**	**4 to 49 %**

Note:

Engine Control Module (ECM) calculates the voltage values of the angle sensors in percent relative to 5 volts and displays these percentage values. (5 volts supply voltage represents 100 %).

- Observe display field 3 and 4.

- Slowly depress accelerator pedal completely.

Percent indication in display field 3 must rise uniformly. The tolerance range 12 to 97% is not used completely during this.

Percent indication in display field 4 must also rise uniformly. In the process, the tolerance range of 4 to 49% is not completely utilized.

cardiagn.com

24-136

Note:

The indicated value in display field 3 must always be about twice as large as the value in display field 4.

If indications do not resemble description:

- Check voltage supply and wire connections of sensor for accelerator pedal position ⇒ Page 24-137 .

cardiagn.com

24-137

Checking voltage supply of Throttle Position (TP) sensor

- Remove driver-side storage compartment.

⇒ *Repair Manual, Body Interior, Repair Group 68; Instrument panel; Driver-side storage compartment, removing*

- Disconnect harness connector for accelerator pedal position sensor.

- Switch ignition on.

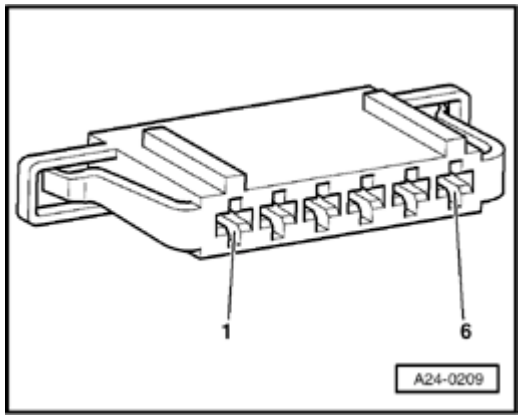

- Connect multimeter for voltage measurement as follows:

Harness connector Terminal	Specified value
1 + Ground (GND)	about 5 V
1 + 5	about 5 V
2 + Ground (GND)	about 5 V
2 + 3	about 5 V

If specified values are obtained:

cardiagn.com

- Also check signal wires.

If specified values are not obtained:

- Check wire connections from Engine Control Module (ECM) to sensors for accelerator pedal position.

cardiagn.com

Checking wire connections

- Connect VAG1598/31 test box at wiring harness to Engine Control Module (ECM), do not connect ECM ⇒ Page 24-19 .

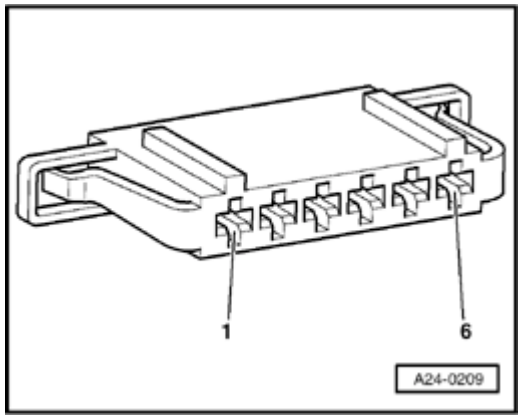

- Check following wire connection for open circuit and short circuit to Ground (GND) and B+:

Harness connector Terminal	VAG1598/31 test box Socket
1	72
2	73
3	36
4	35
5	33
6	34

- Repair open circuit or short circuit if necessary.

If no malfunctions are found in wires:

- Replace accelerator pedal position sensor.

⇒ *Repair Manual, Fuel Supply System, Repair Group 20*

cardiagn.com

24-139

Kick down function, adapting

If the sensor for accelerator pedal position or the Engine Control Module (ECM) is replaced on a vehicle with automatic transmission, the kick down function must be adapted.

Special tools and equipment

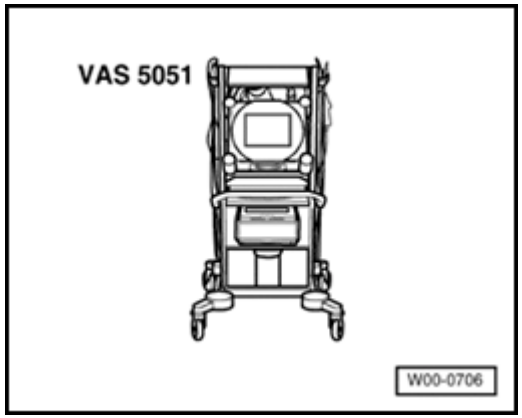

- VAS5051 with VAG5051/1

or

- VAG1551 with VAG1551/3A

Requirements

- No DTCs in DTC memory, check DTC memory ⇒ Page 01-16 .
- Engine not running, ignition switched on.

Procedure

- Connect VAS5051 tester or VAG1551 scan tool and select control module for engine electronics using "address word" 01 ⇒ Page 01-10 . Ignition must remain switched on.

cardiagn.com

24-140

Rapid data transfer	**HELP**
Select function XX	

When indicated on display

- Press buttons -0- and -4- to select "Initiate basic setting" and press -Q- button to confirm input.

Basic Setting	**Q**
Enter display group number XXX	

When indicated on display

- Press buttons -0-, -6- and -3- to select "display group number 063" and press -Q- button to confirm input.

System in basic setting 63			→
1	**2**	**3**	**4**

When indicated on display

Note:

There will be a prompt: "Operate kickdown".

- Depress accelerator pedal completely, past kick down point, and hold down.

Note:

During adaptation of the kick down point, the VAG1551 will display "Kick down ADP in progress". After successful adaptation of the kick down point, the VAG1551 will display "Kick down ADP OK".

- Check specified value in display field 4:

cardiagn.com

24-141

	Display fields			
	1	2	3	4
Display group 063: Kick down function, adapting				
Display	xx %	xx %	**Kick down**	**---**
Indicated	Sensor 1 for Pedal position	Sensor 2 for Pedal position	**Kick down**	**Adaptation condition**
Functional range			**Kick down**	**operate** **ADP in progress** **ADP OK** **ERROR**
Specified value	12 to 97 %	4 to 49 %	**Kick down**	**ADP OK**
Note				**If "ERROR." is displayed: Check DTC memory ⇒ Page 01-16 .**

Note:

- *The abbreviation "ADP" in display field 4 stands for Adaptation.*
- *"ERROR" can be indicated, for example, if the accelerator pedal is not immediately pressed in response to a request by the tester or if the accelerator pedal is released while adaptation is running despite the fact that adaptation is not yet*

cardiagn.com

complete. In both cases, "Basic Setting" must be exited and the adaptation must be performed again ⇒ *Page 24-139* .

cardiagn.com

24-142

If specified value "ADP OK" is obtained:

- Press → button.

Rapid data transfer	**HELP**
Select function XX	

Indicated on display (function selection):

cardiagn.com

24-143

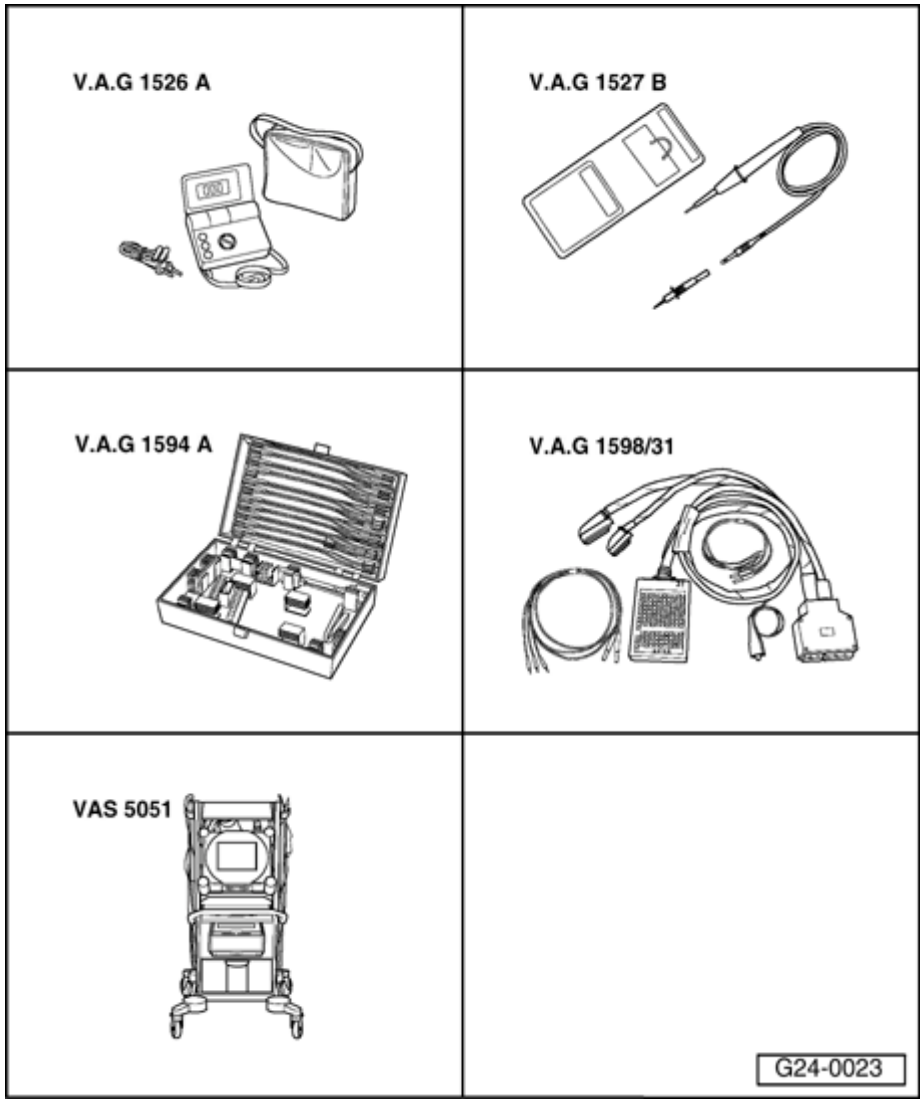

Brake light switch and brake pedal switch, checking

Special tools and equipment

- VAG1526A
- VAG1527B
- VAG1594A
- VAG1598/31
- VAS5051 with VAG5051/1

- or

- VAG1551 with VAG1551/3A

cardiagn.com

24-144

Note:

For safety reasons, the instruction from the accelerator pedal sensor (potentiometer) to the ECM to open the throttle valve is suppressed when brake is being operated. This requires the brake light switch signal and also the brake pedal switch signal in the control module. If brake pedal is operated with accelerator pedal constantly depressed, engine is immediately regulated down to idle speed. A faulty switch can lead to undesired regulation.

Test sequence

- Connect VAS5051 tester or VAG1551 scan tool and select control module for engine electronics using "address word" 01 ⇒ Page 01-10 . Ignition must remain switched on.

Rapid data transfer	**HELP**
Select function XX	

When indicated on display

- Press buttons -0- and -8- to select "Read Measuring Value Block" and press -Q- button to confirm input.

Read measuring value block	**Q**
Enter display group number XXX	

When indicated on display

- Press buttons -0-, -6- and -6- to select "display group number 066" and press -Q- button to confirm input.

cardiagn.com

24-145

Read Measuring Value Block 66 →

1 2 3 4

Indicated on display

- Check brake light/brake pedal switch in display field 2.

	Display fields			
	1	2	3	4
Display group 066: Signals to Engine Control Module (ECM)				
Display	xxx km/h	**XXXX**	xxx km/h	XXXX
Indicated	ACTUAL speed	**Switch positions**	SPECIFIED speed	Switch positions
Functional range		**XX00** **XX11**		
Specified value		**XX00** **(with brake pedal not operated)** **XX11** **(with brake pedal operated)**		
Note		**Value:X = no significance.** **Switch points slightly offset**		

cardiagn.com

24-146

If indications do not resemble description:

Check switch

- Remove driver-side storage compartment.

⇒ *Repair Manual, Body Interior, Repair Group 68; Instrument panel; Driver-side storage compartment, removing*

- Disconnect harness connector at brake light switch and brake pedal switch.

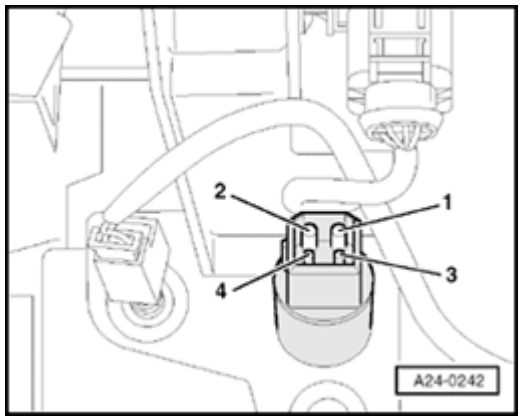

- Connect multimeter between terminal 1 and 2 for resistance measurement.
  - ♦ Specification: ∞ Ω (no continuity)
- Depress accelerator pedal.
  - ♦ Specification: approx. 0 Ω
- Connect multimeter between terminal 3 and 4 for resistance measurement.
  - ♦ Specification: approx. 0 Ω
- Depress accelerator pedal.
  - ♦ Specification: ∞ Ω (no continuity)

If specified values are not obtained:

cardiagn.com

- Replace brake light switch / brake pedal switch.

cardiagn.com

24-147

If specified values are obtained:

- Check voltage supply

Checking voltage supply

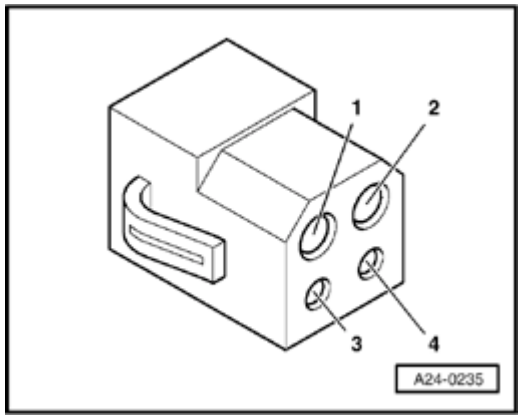

- Connect VAG1527B voltage tester as follows:

Harness connector Terminal	Measure to
1	Chassis Ground (GND)

♦ LED must light up.

Harness connector Terminal	Measure to
3	Chassis Ground (GND)

- Switch ignition on.

♦ LED must light up.

If LED does not light up:

- Check wire connection from terminal 1 or 3 of connector for open circuit and short circuit to Ground (GND):

⇒ *Electrical Wiring Diagrams, Troubleshooting & Component Locations*

cardiagn.com

- Repair open circuit or short circuit if necessary.

If LED lights up:

- Checking activation.

Checking activation

- Connect VAG1598/31 test box at wiring harness to Engine Control Module (ECM), do not connect ECM ⇒ Page 24-19 .

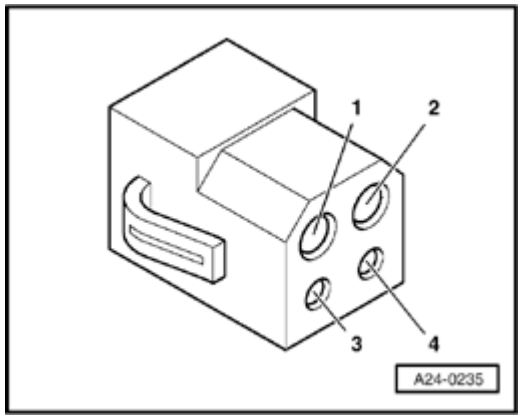

- Check following wire connections for open circuit and short circuit to Ground (GND) and B+:

Harness connector Terminal	VAG1598/31 test box Socket
2	56
4	55

- Repair open circuit or short circuit if necessary.

cardiagn.com

24-149

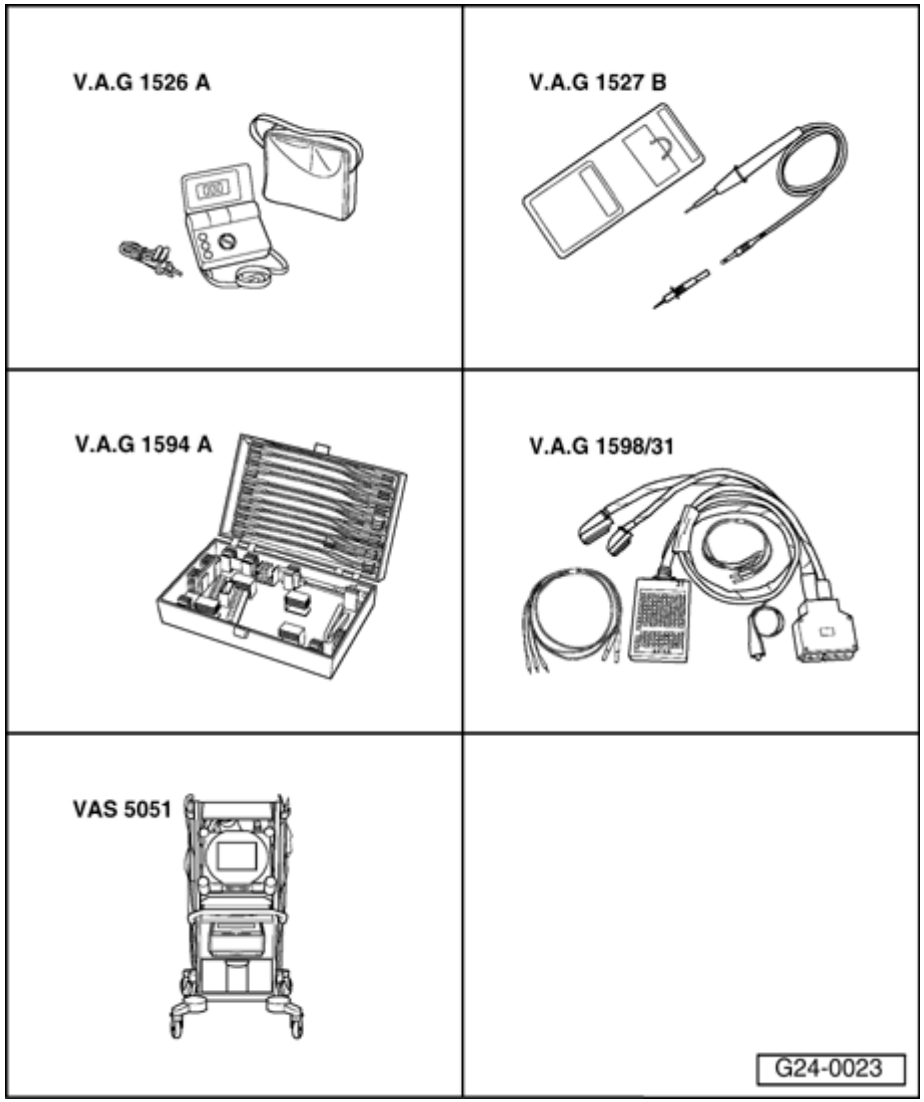

Clutch vacuum vent valve switch -F36-, checking

Special tools and equipment

- VAG1526A
- VAG1527B
- VAG1594A
- VAG1598/31
- VAS5051 with VAG5051/1

- or

- VAG1551 with VAG1551/3A

cardiagn.com

24-150

Note:

This signal helps prevent excessive RPM oscillations and tip-in shocks when clutch is disengaged and is required for the cruise control system.

Test sequence

- Connect VAS5051 tester or VAG1551 scan tool and select control module for engine electronics using "address word" 01 ⇒ Page 01-10 . Ignition must remain switched on.

Rapid data transfer	**HELP**
Select function XX	

When indicated on display

- Press buttons -0- and -8- to select "Read Measuring Value Block" and press -Q- button to confirm input.

Read measuring value block	**Q**
Enter display group number XXX	

When indicated on display

- Press buttons -0-, -6- and -6- to select "display group number 066" and press -Q- button to confirm input.

Read Measuring Value Block 66			→
1	**2**	**3**	**4**

Indicated on display

- Check Clutch Pedal Position (CPP) switch in display field 2.

cardiagn.com

24-151

	Display fields			
	1	2	3	4
Display group 066: Signals to Engine Control Module (ECM)				
Display	xxx km/h	**XXXX**	xxx km/h	XXXX
Indicated	ACTUAL speed	**Switch positions**	SPECIFIED speed	Switch positions
Functional range		**XX00** **XX11**		
Specified value		**X0XX** **(at clutch pedal not operated)** **X1XX** **(at clutch pedal operated)**		
Note		**Value:X = no significance**		

cardiagn.com

24-152

If indications do not resemble description:

Check switch

- Remove driver-side storage compartment.

⇒ *Repair Manual, Body Interior, Repair Group 68; Instrument panel; Driver-side storage compartment, removing*

- Disconnect harness connector at Clutch Pedal Position (CPP) switch.

- Connect multimeter between terminal 1 and 2 for resistance measurement.

  ♦ Specification: approx. 0 Ω

- Depress clutch pedal.

  ♦ Specification: ∞ Ω (no continuity)

If specified value is not obtained:

- Replace Clutch Pedal Position (CPP) switch.

If specified value is obtained:

cardiagn.com

- Check voltage supply

cardiagn.com

24-153

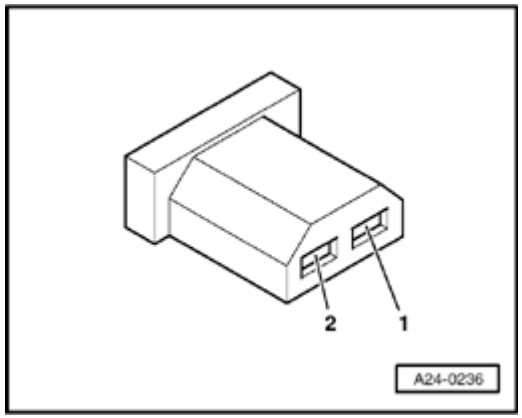

Checking voltage supply

- Connect VAG1527B voltage tester as follows:

Harness connector Terminal	Measure to
1	Chassis Ground (GND)

- Switch ignition on.
  - ♦ LED must light up.

If LED does not light up:

- Check wire connection from terminal 1 of connector to fuse for open circuit:

⇒ *Electrical Wiring Diagrams, Troubleshooting & Component Locations*

- Repair open circuit if necessary.

If LED lights up:

- Checking activation.

cardiagn.com

Checking activation

- Connect VAG1598/31 test box at wiring harness to Engine Control Module (ECM), do not connect ECM ⇒ Page 24-19 .

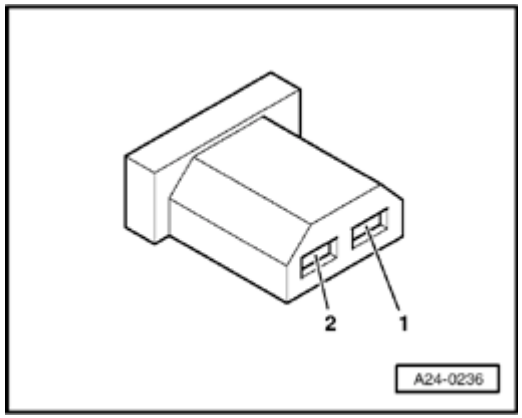

- Check following wire connection for open circuit and short circuit to Ground (GND) and B+:

Harness connector Terminal	VAG1598/31 test box Socket
2	39

- Repair open circuit or short circuit if necessary.

cardiagn.com

24-155

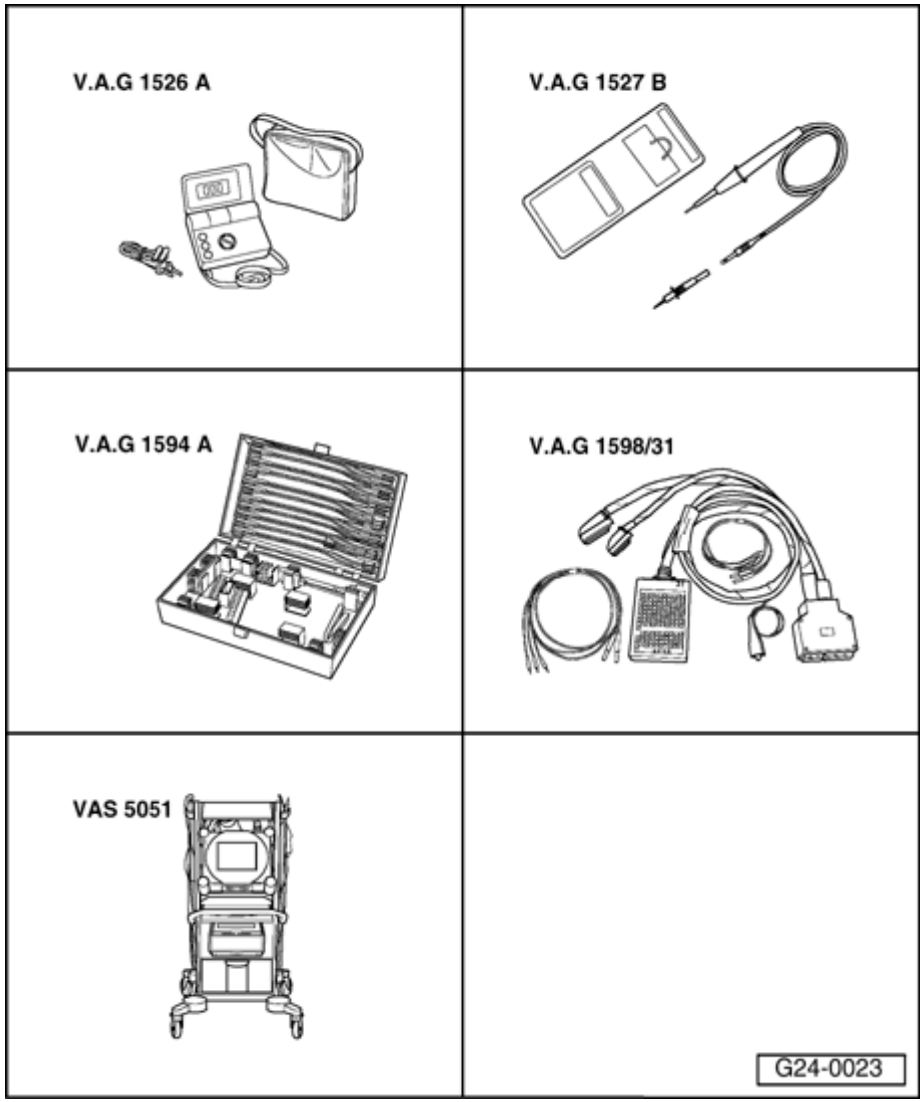

Additional signals, checking

Special tools and equipment

- VAG1526A
- VAG1527B
- VAG1594A
- VAG1598/31
- VAS5051 with VAG5051/1

- or

- VAG1551 with VAG1551/3A

cardiagn.com

24-156

Engine speed signal, checking

Note:

The engine speed signal is output at terminal 37 of the Engine Control Module (ECM). The signal is used, among other things, for RPM display in the instrument cluster.

- Connect VAG1598/31 test box at wiring harness to Engine Control Module (ECM), do not connect ECM ⇒ Page 24-19 .

- Check following wire connection for open circuit and short circuit to Ground (GND) and B+:

Test box VAG1598/31 Socket	Instrument cluster Terminal
37	⇒ *Electrical Wiring Diagrams, Troubleshooting & Component Locations*

- Repair open circuit or short circuit if necessary.

cardiagn.com

24-157

Vehicle speed signal, checking

Note:

- *The vehicle speed signal is generated by the speedometer Vehicle Speed Sensor (VSS) - G22- (at transmission) and is processed in the instrument cluster.*

- *The processed signal enters at terminal 54 of the ECM and is used for idle stabilization and tip-in shock reduction during shifting.*

Test requirement:

- Function and display of speedometer OK. Troubleshooting:

⇒ *Repair Manual, Electrical Equipment, Repair Group 90; Instrument cluster; Speed signal, checking*

Test sequence

- Connect VAS5051 tester or VAG1551 scan tool and select control module for engine electronics using "address word" 01 ⇒ Page 01-10 . Engine must run at idle.

cardiagn.com

24-158

WARNING!

To reduce the risk of accident during road tests, always observe safety precautions ⇒ ***Page 24-1*** .

Rapid data transfer	**HELP**
Select function XX	

When indicated on display

- Press buttons -0- and -8- to select "Read Measuring Value Block" and press -Q- button to confirm input.

Read measuring value block	**Q**
Enter display group number XXX	

When indicated on display

- Press buttons -0-, -0- and -5- to select "display group number 005" and press -Q- button to confirm input.

Read Measuring Value Block 5			→
1	**2**	**3**	**4**

Indicated on display

Determining via road test whether vehicle speed is displayed in display field 3.

- If vehicle speed is not display, lift vehicle -if possible using a vehicle lift- until front left wheel is free.

cardiagn.com

- Connect VAG1598/31 test box at wiring harness to Engine Control Module (ECM), do not connect ECM ⇒ Page 24-19 .

- Connect VAG1527B voltage tester to sockets 3 (B+) and 54 (VSS) of VAG1598/31 test box.

- Switch ignition on and turn front left wheel by hand.

  - LED must blink (very brief blink signal).

If LED does not blink:

- Check following wire connection for open circuit and short circuit to Ground (GND) and B+:

Test box VAG1598/31 Socket	Instrument cluster Terminal
54	⇒ *Electrical Wiring Diagrams, Troubleshooting & Component Locations*

- Repair open circuit or short circuit if necessary.

cardiagn.com

24-160

A/C compressor shut-off, checking

Note:

- *The A/C compressor signal communicates to the ECM that the compressor will be switched on in 140 ms.*
- *The Engine Control Module (ECM) can switch off the A/C compressor via the same wire connection.*
- *Engine Control Module (ECM) switches off A/C compressor:*

  - - during hard acceleration (Wide Open Throttle 1st gear)

  - - in emergency mode (emergency operation)

  - - after initiating basic setting (function 04)

Test requirements:

- A/C system OK
- No DTCs in DTC memory of Engine Control

cardiagn.com

Module (ECM).

- Vehicle at room temperature (warmer than +15 °C).

cardiagn.com

24-161

Test sequence

- Connect VAS5051 tester or VAG1551 scan tool and select control module for engine electronics using "address word" 01 ⇒ Page 01-10 . Engine must run at idle.

Rapid data transfer	**HELP**
Select function XX	

When indicated on display

- Press buttons -0- and -8- to select "Read Measuring Value Block" and press -Q- button to confirm input.

Read measuring value block	**Q**
Enter display group number XXX	

When indicated on display

- Press buttons -0-, -5- and -0- to select "display group number 050" and press -Q- button to confirm input.

Read Measuring Value Block 50			→
1	**2**	**3**	**4**

Indicated on display(1 to 4 = display fields)

- Switch A/C system off.
  - Specified value in display field 4: Compr. OFF
- Switch A/C system on using "Auto" button and adjust A/C system to maximum cooling or heating power. Compressor must run.
  - Specified value in display field 4: Compr. ON

cardiagn.com

- Depress gas pedal completely (swiftly) and then release it (brief acceleration).

  - Specified value in display field 4: Indication jumps for a few seconds from "Compr. ON" to "Compr. OFF" (compressor is switched off when vehicle accelerates).

If indications do not resemble description:

- Connect VAG1598/31 test box at wiring harness to Engine Control Module (ECM), do not connect ECM ⇒ Page 24-19 .

- Check following wire connection for open circuit and short circuit to Ground (GND) and B+:

Test box VAG1598/31 Socket	A/C control head -E87- Terminal
41	⇒ *Electrical Wiring Diagrams, Troubleshooting & Component Locations*

- Repair open circuit or short circuit if necessary.

cardiagn.com

- If there are no malfunctions in the wiring, check function of A/C system.

⇒ *Repair Manual, Heating & Air Conditioning, Repair Group 01; On Board Diagnostic (OBD) of A/C system*

cardiagn.com

24-163

Wire for crash signal, checking

The Engine Control Module (ECM) receives the crash signal ("Crash shut-off was triggered") from the airbag control module.

When the airbag control module sends the crash signal to the ECM (during an accident or when output DTM is being performed for the airbag system), the ECM switches the Fuel Pump (FP) off. This means that the engine will stop running but can be started again afterward (e.g. to remove vehicle from danger).

- Connect VAG1598/31 test box at wiring harness to Engine Control Module (ECM), do not connect ECM ⇒ Page 24-19 .

- Check following wire connection for open circuit and short circuit to Ground (GND) and B+:

Test box VAG1598/31 Socket	Control module for Airbag -J234- Terminal
67	⇒ *Electrical Wiring Diagrams, Troubleshooting & Component Locations*

cardiagn.com

24-164

- Repair open circuit or short circuit if necessary.

⇒ *Electrical Wiring Diagrams, Troubleshooting & Component Locations*

If no malfunctions are found in wire:

- Check DTC memory of control module for airbag:

⇒ *Repair Manual, Body On Board Diagnostic (OBD), Repair Group 01; OBD of airbag system BAE (basic trigger unit) with side airbag; DTC memory, checking*

cardiagn.com

24-165

Consumption signal for board computer, checking

Note:

- *The consumption signal is calculated by the ECM from the injection time and directed to the board computer via terminal 81 of the ECM.*

- *Consumption signal, checking*

⇒ *Electrical Wiring Diagrams, Troubleshooting & Component Locations*

cardiagn.com

24-166

Wire for fuel level signal, checking

Note:

- *The signal helps with cause localization when certain malfunctions are recognized (e.g. combustion misfires).*

- *The processed signal enters at terminal 30 of the ECM and is used to determine the cause of certain recognized malfunctions (e.g. combustion misfires).*

- Connect VAG1598/31 test box at wiring harness to Engine Control Module (ECM), do not connect ECM ⇒ Page 24-19 .

- Check following wire connection for open circuit and short circuit to Ground (GND) and B+:

Test box VAG1598/31 Socket	Instrument cluster Terminal
30	⇒ *Electrical Wiring Diagrams, Troubleshooting & Component Locations*

cardiagn.com

- Repair open circuit or short circuit if necessary.

cardiagn.com

24-167

Signal for rough terrain recognition, checking

Note:

- *When the ABS/EDL control module recognizes that a wheel is spinning, the ABS/EDL control module generates the rough terrain signal. When the Engine Control Module (ECM) recognizes the rough terrain signal, combustion misfire recognition is switched off in the Engine Control Module (ECM).*

- *Only check the rough terrain signal if the malfunction "18014 (P1606) rough terrain info/engine torque from ABS cont. mod. Electrical malfunction in circuit" is stored DTC memory. It is possible that the malfunction "Combustion misfire" is also stored in DTC memory as a side effect and it can be disregarded.*

- *The wire connection and rough terrain signal are monitored by the Engine Control Module (ECM).*

cardiagn.com

24-168

Test requirement:

- Control module coding OK ⇒ Page 01-62 .

Test sequence

- Switch ignition off.

- Connect VAG1598/31 test box at wiring harness to Engine Control Module (ECM), do not connect ECM ⇒ Page 24-19 .

- Check following wire connection for open circuit and short circuit to Ground (GND) and B+:

Test box VAG1598/31 Socket	ABS control module (w/EDL) -J104- Terminal
74	⇒ *Electrical Wiring Diagrams, Troubleshooting & Component Locations*

If no malfunctions are found in wire:

- Replace ABS control module.

cardiagn.com

If the malfunction is indicated again after replacing the ABS control module:

- Replace Engine Control Module (ECM) ⇒ Page 24-23

cardiagn.com

24-169

Data transfer between Engine Control Module (ECM) and CAN-capable control modules, checking

Note:

- *Data exchange between individual control modules occurs via a bus system.*
- *The term "CAN-bus" refers to a system that transports and distributes data.*
- *The wire connections between the control modules, via which data is transferred, are referred to as data wires.*
- *Data is transferred to the connected control modules serially (one after the other) via these data wires (i.e. engine speed, accelerator position).*

Checking bus system

The DTC table suggested checking the data exchange between the Engine Control Module (ECM) and CAN capable control modules.

- Connect VAS5051 tester or VAG1551 scan tool and select control module for engine electronics using "address word" 01 ⇒ Page 01-10 . Ignition

cardiagn.com

must remain switched on.

cardiagn.com

24-170

Rapid data transfer	**HELP**
Select function XX	

When indicated on display

- Press buttons -0- and -8- to select "Read Measuring Value Block" and press -Q- button to confirm input.

Note:

Measuring value blocks 125 and 126 indicate the participants in the powertrain data-BUS.

Read measuring value block	**Q**
Enter display group number XXX	

When indicated on display

- Press buttons -1-, -2- and -5- to select "display group number 125" and press -Q- button to confirm input.

Read Measuring Value Block 125			→
1	**2**	**3**	**4**

When indicated on display

- Check indications in display fields 1 through 4.

  CAN capable control modules connected to the Engine Control Module (ECM) are indicated:

  - No indication: Control module not CAN-capable
  - Indication 1: CAN capable control module is connected to databus
  - Indication 0: CAN capable control module is not connected to databus

Read Measuring Value Block 126			→
1	**2**	**3**	**4**

- Check under display group 126 in the same manner.
- Press → button.

cardiagn.com

24-171

Rapid data transfer **HELP** **Select function XX**	When indicated on display - Press buttons -0- and -6- to select "End output" and press -Q- button to confirm input.
Rapid data transfer **HELP** **Enter address word XX**	When indicated on display - Press button 0- twice to select "Automatic test sequence", address word 00. Press -Q- button to confirm input. ♦ DTC memory of all OBD capable systems in the vehicle will be checked. When a control module responds with its identification, the display indicates the number of stored errors or indicates "no malfunctions recognized". DTCs stored in the system are indicated in sequence and printed out. Then the VAG1551 scan tool sends the next address word.
VAG - On Board Diagnostic (OBD) HELP **1- Rapid data transfer*** **2- Blink code output***	The automatic test sequence is over when the following indication appears on the display If a malfunction related to the"powertrain databus" or the "CAN-bus" is indicated: - Check whether the Engine Control Module (ECM) and other CAN capable control modules installed are appropriate for this vehicle (part no. and coding).

cardiagn.com

24-172

If the correct control modules are installed:

- Check to be sure multi-pin connectors of control modules are securely connected.

If multi-pin connectors are properly secured:

- Check CAN bus system

Checking a "two-line bus system"

Three or more control modules are communicating across a "two-line bus system".

- Analyze DTCs stored in memories of control modules.

Note:

This analysis will help you locate the cause of the line malfunction.

cardiagn.com

24-173

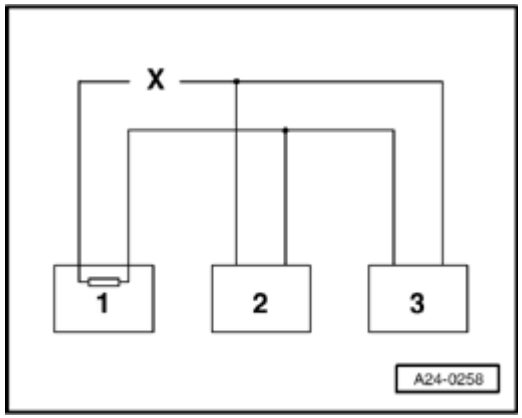

Example 1:

From the DTCs stored in the memories, you have determined that control module 1 is not communicating with control modules 2 and 3.

Control module	DTCs stored in DTC memories:
1	♦ Missing signal from control module 2 ♦ Missing signal from control module 3
2	♦ Missing signal from control module 1
3	♦ Missing signal from control module 1

- Switch ignition off.
- Disconnect control modules connected across bus wires and check bus wires for an open circuit.

⇒ *Electrical Wiring Diagrams, Troubleshooting & Component Locations*

- Replace control module 1 if no malfunctions can be found in bus wires.

cardiagn.com

24-174

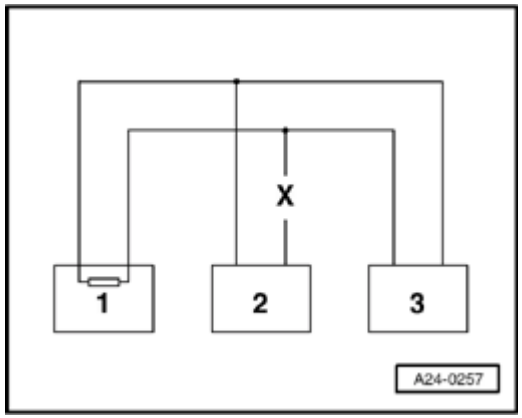

Example 2:

From the DTCs stored in the memories, you have determined that control module 2 is not communicating with control modules 1 and 3.

Control module	DTCs stored in DTC memories:
1	♦ Missing signal from control module 2
2	♦ Missing signal from control module 1 ♦ Missing signal from control module 3
3	♦ Missing signal from control module 2

- Switch ignition off.
- Disconnect control modules connected across bus wires and check bus wires for an open circuit.

⇒ *Electrical Wiring Diagrams, Troubleshooting & Component Locations*

- Replace control module 2 if no malfunctions can be found in bus wires.

cardiagn.com

24-175

Example 3:

Using the DTCs stored in the memories, you have determined that none of the control modules are sending or receiving signals.

Control module	DTCs stored in DTC memories:
1	♦ Powertrain databus faulty
2	♦ Powertrain databus faulty
3	♦ Powertrain databus faulty

- Switch ignition off.

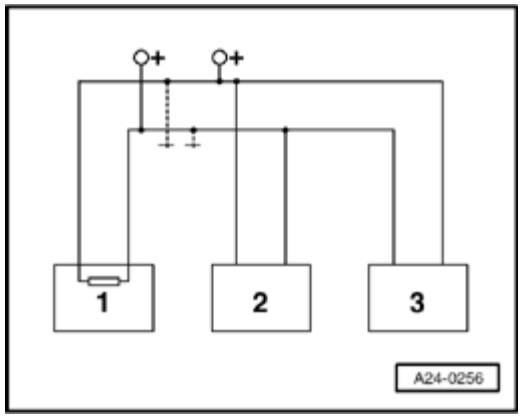

- Disconnect control modules connected across bus wires and check bus wires for a short circuit to B+ and Ground (GND).

⇒ *Electrical Wiring Diagrams, Troubleshooting & Component Locations*

cardiagn.com

24-176

If you cannot determine a cause for the DTC "Powertrain databus malfunction, check whether the DTC is caused by one of the control modules.

All control modules that use the CAN-bus are still disconnected. Ignition is switched off.

- Connect one control module.
- Connect VAG 1551 scan tool. Switch ignition on, and erase DTC memory of control module just connected. End scan tool output using "End Output" function 06.
- Switch ignition off and then on.
- Leave ignition on for 10 seconds. Read DTC memory of control module just connected.
- If DTC "Powertrain databus malfunction" is displayed, replace control module just connected.
- If DTC "Powertrain databus malfunction" is not displayed, connect next control module and repeat procedure.

cardiagn.com

24-177

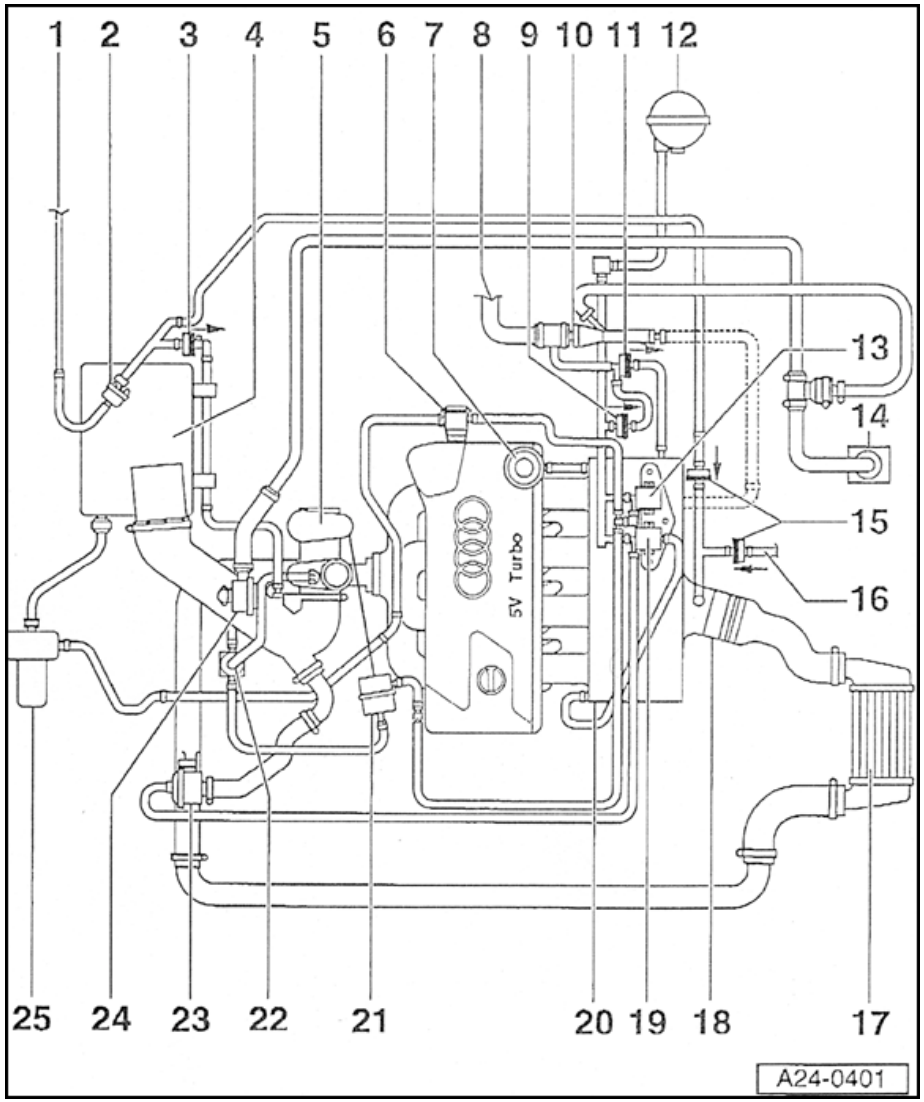

Vacuum diagram

1 - To EVAP canister

2 - Evaporative Emission (EVAP) canister purge regulator valve -N80-

3 - Check-valve for EVAP canister

- between EVAP canister and intake manifold before turbocharger
- Installation position (light/dark side): Arrow points in direction of flow, as shown in figure.

4 - Air cleaner housing

- with Mass Air Flow (MAF) sensor -G70-

5 - Turbocharger

6 - Combination valve for secondary air injection (AIR)

cardiagn.com

24-178

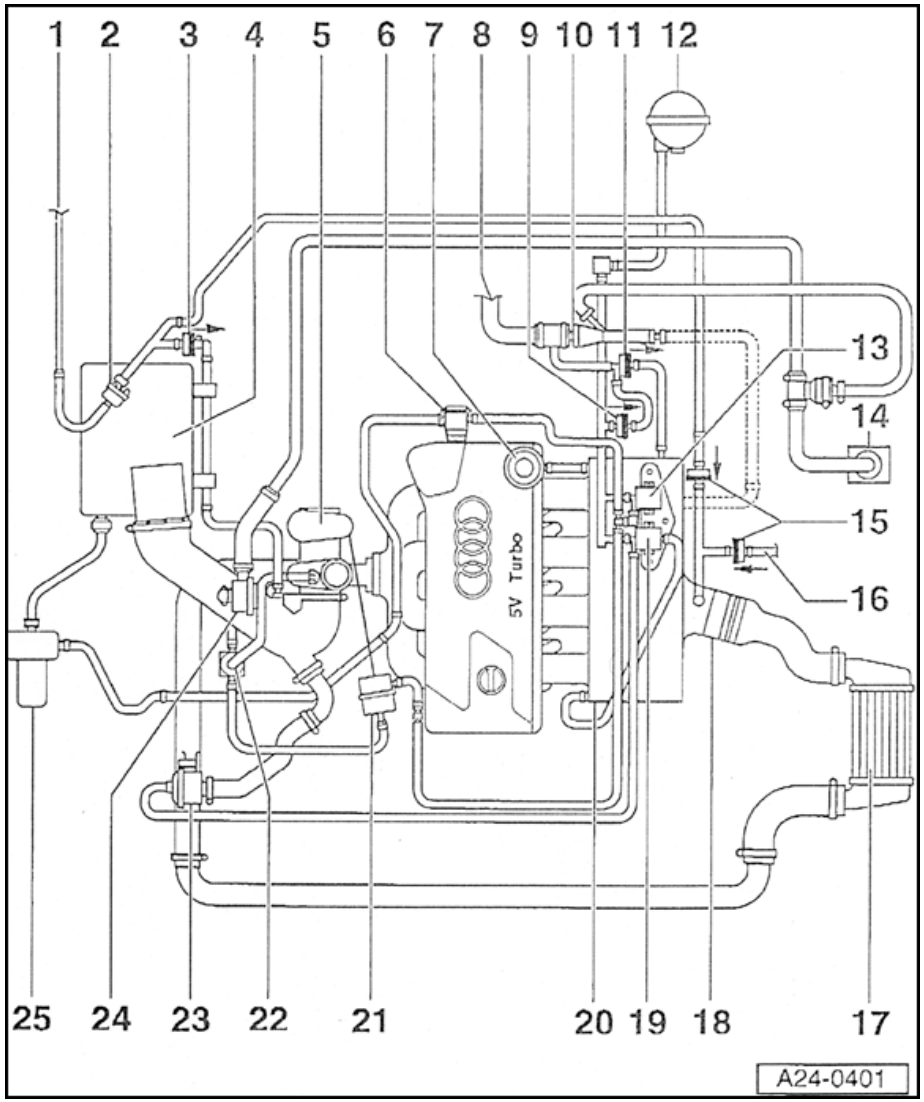

7 - Fuel pressure regulator

8 - To brake booster

9 - Check-valve

- Between brake booster and intake manifold
- Installation position (light/dark side): Arrow points in direction of flow, as shown in figure.

10 - Vacuum booster

11 - Check-valve

- Between brake booster and intake manifold
- Installation position (light/dark side): Arrow points in direction of flow, as shown in figure.

cardiagn.com

24-179

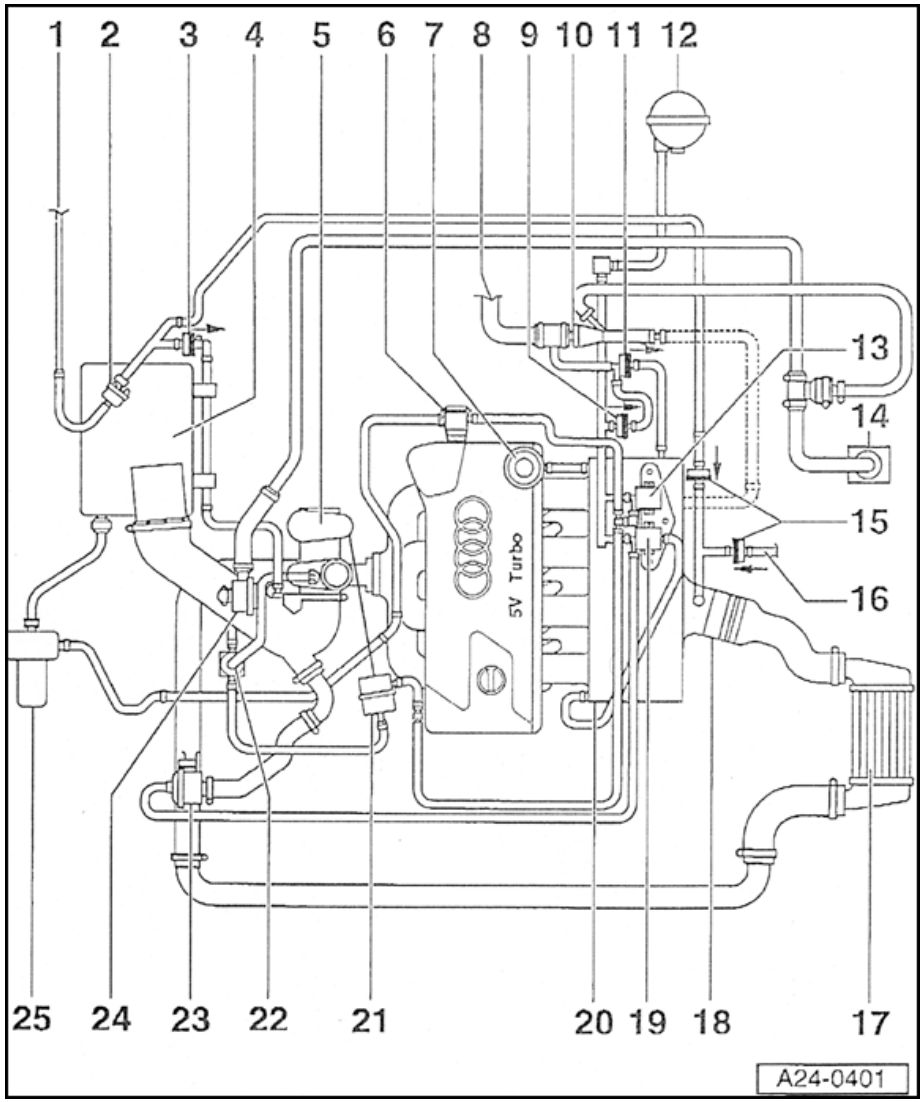

12 - Vacuum reservoir

- Installation location: Under wheel housing liner in front left wheel housing

13 - Secondary Air Injection (AIR) solenoid valve-N112-

- Installation location: Below intake manifold

14 - Crankcase ventilation

15 - Check-valve

- between EVAP canister and intake manifold
- between Leak Detection Pump (LDP) and intake manifold
- Installation position (light/dark side): Arrow points in direction of flow, as shown in figure.

16 - to Leak Detection Pump (LDP) -V144-

cardiagn.com

24-180

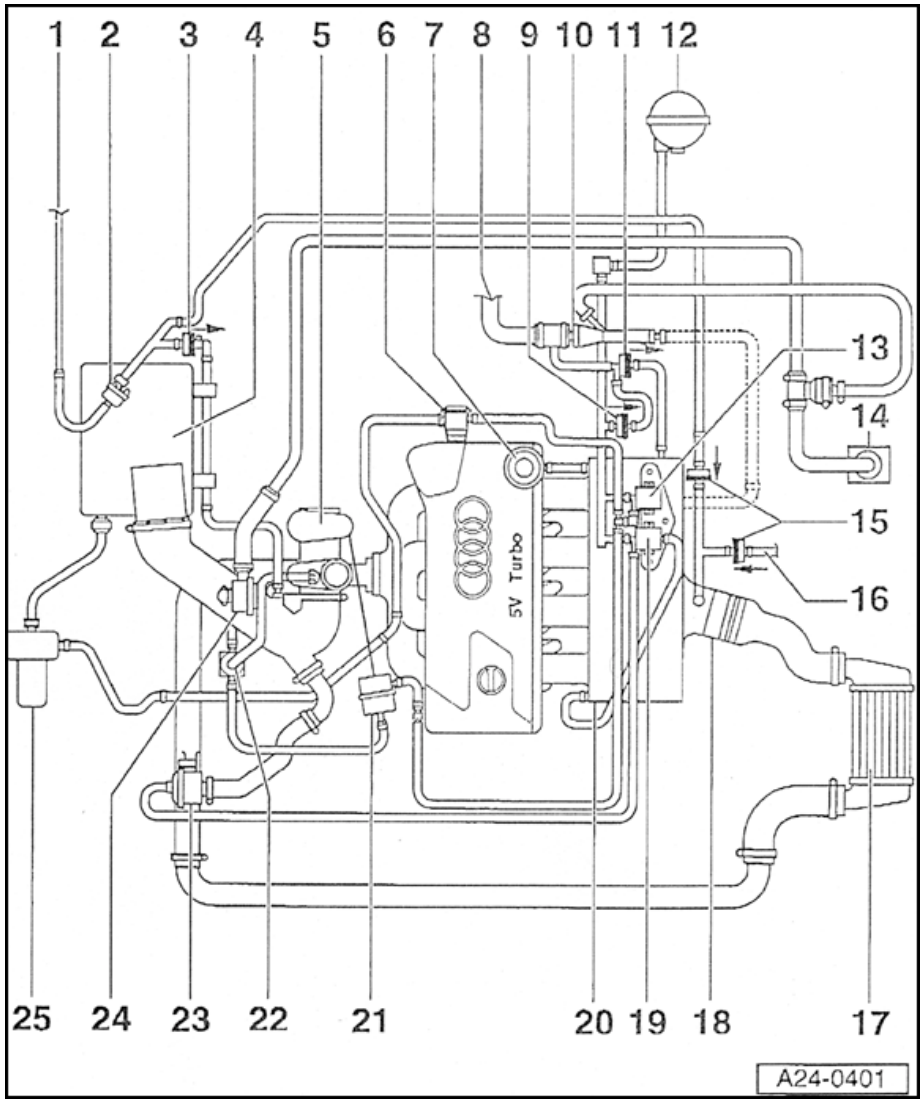

17 - Charge air cooler

- with charge air pressure sensor -G31-

18 - Throttle valve control module -J338-

19 - Recirculating valve for turbocharger-N249-

- Installation location: Below intake manifold

20 - Intake manifold

- with Intake Air Temperature (IAT) sensor -G42-

21 - Vacuum diaphragm for boost pressure regulation

- When the combination valve is opened, the mechanical boost pressure regulation valve in the turbocharger is opened and secondary air is thereby channeled past the turbocharger directly to the catalytic converter

cardiagn.com

24-181

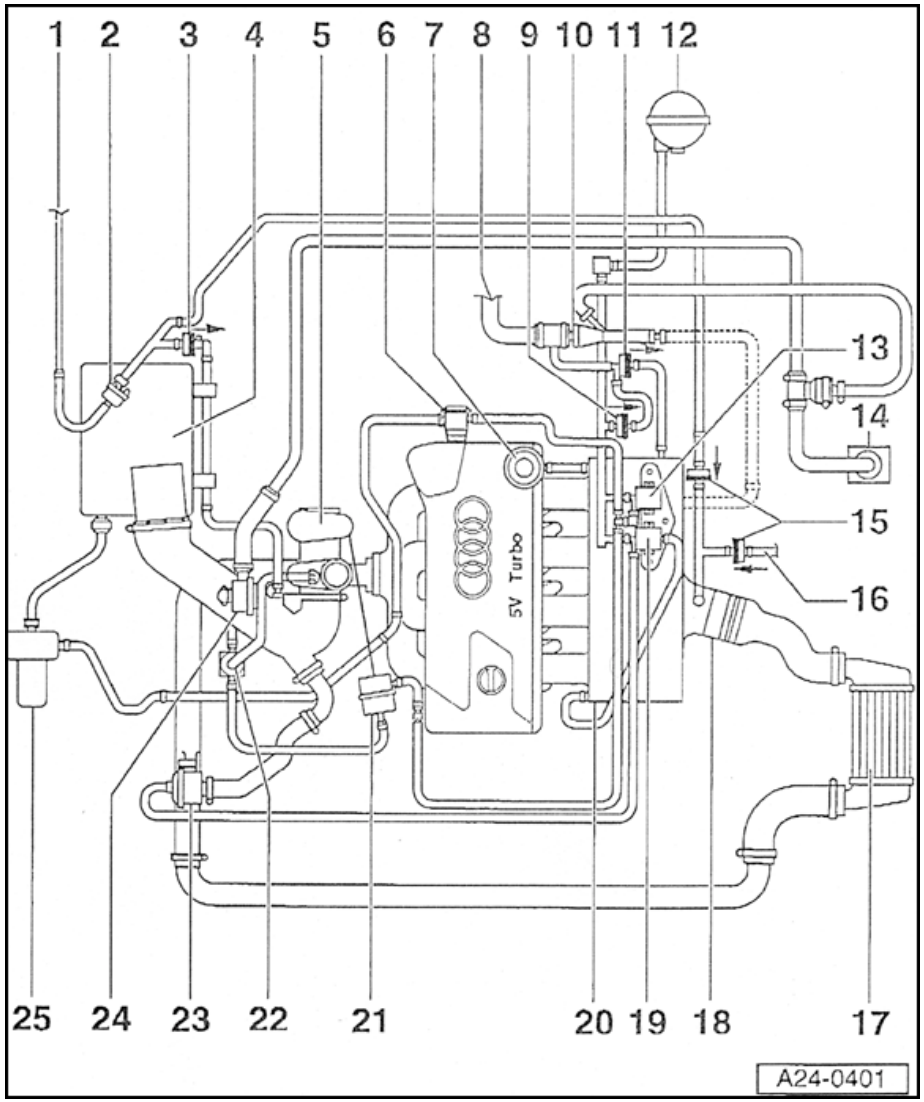

22 - Wastegate bypass regulator valve -N75-

23 - Mechanical recirculation valve

24 - Pressure control valve for crankshaft housing ventilation

25 - Secondary Air Injection (AIR) pump motor-V101-

cardiagn.com

28-1

Ignition system, checking

General notes on ignition system

Note:

- *The battery should only be disconnected and reconnected when the ignition is turned off, since otherwise the Engine Control Module (ECM) can be damaged.*
- *For the electric components to work properly, a voltage of at least 12.7 V is required.*
- *It is possible that the control module will recognize a malfunction and store a DTC during some tests. After completing all tests and repairs, DTC memory should therefore be checked and erased if necessary.*
- *If the engine only starts briefly and then turns off again after troubleshooting, repair or checking of the components, it may be that the immobilizer is blocking the Engine Control Module (ECM). DTC memory must then be checked and if necessary, control module must be adapted.*

cardiagn.com

28-2

Safety precautions

To reduce the risk of personal injury and/or damage to the fuel injection and ignition system, always observe the following:

- Do not touch or disconnect ignition wires when engine is running or turning at starting RPM.
- Always switch ignition off before disconnecting or reconnecting wires for the injection and ignition system, including high voltage wiring and test leads.
- If engine is to be cranked at starting RPM without starting (e.g. for compression testing), disconnect connector from ignition coils and from fuel injectors.
- It is possible that the control module will recognize a malfunction and store a DTC during some tests. After completing all tests and repairs, DTC memory should therefore be checked and erased if necessary. Readiness code must be generated after DTC memory is erased ⇒ Page 01-73 .
- Always switch ignition off before cleaning engine.

cardiagn.com

28-3

Technical data

Engine identification	ATW (1.8 L / 5V/ 110 kW engine)
Idle speed Engine speed cannot be adjusted, it is regulated by idle stabilization	Front Wheel Drive (FWD): 740 to 860 RPM All-Wheel Drive Vehicles: 800 to 920 RPM
Engine speed (RPM) limitation Via fuel injector shut-off	about 6800 RPM
Ignition timing is determined in the control module It is not possible to adjust the ignition timing	
Ignition system	Single coil ignition system with 4 ignition coils (power output stages integrated) that are connected directly to spark plugs via the ignition cables.
Spark plugs	Tightening torque 30 Nm.
Firing sequence	1-3-4-2

cardiagn.com

28-4

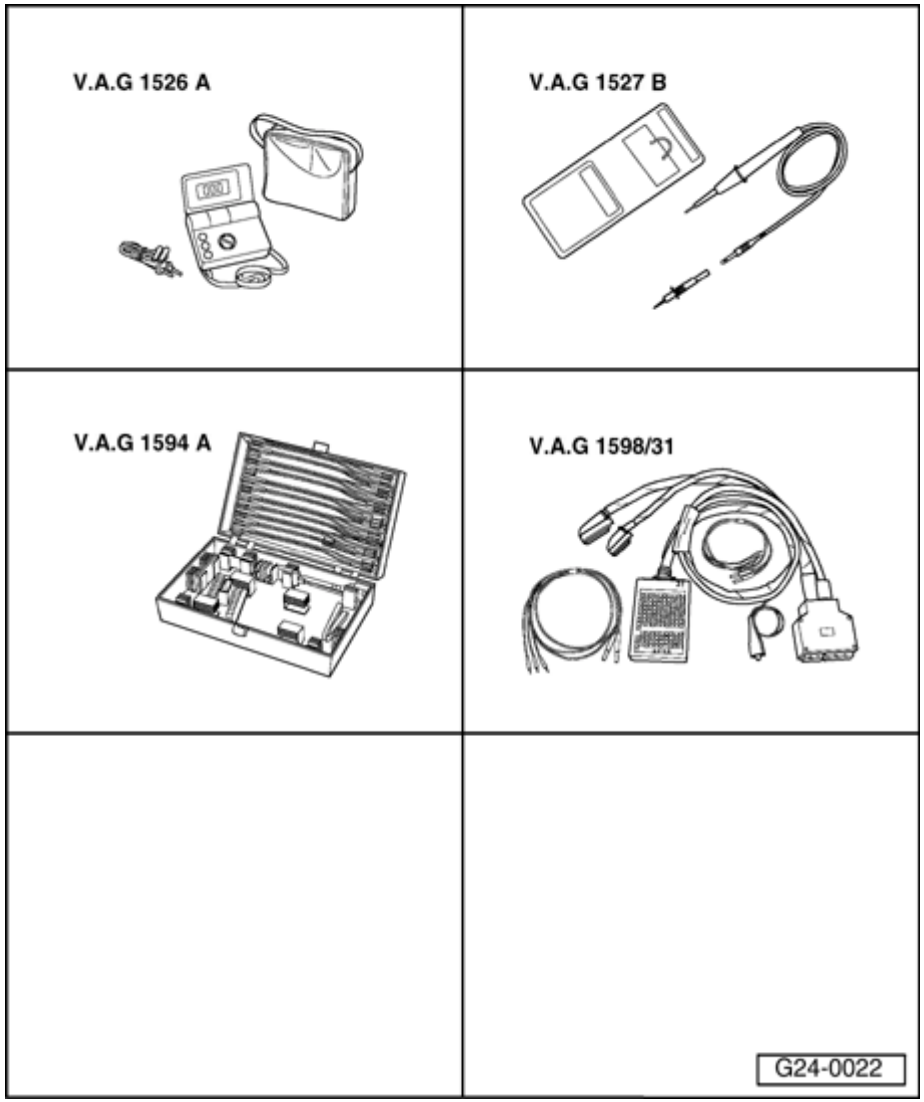

Ignition coils with power output stages, checking

Special tools and equipment

- VAG1526A
- VAG1527B
- VAG1594A
- VAG1598/31

cardiagn.com

28-5

Test sequence

Note:

The ignition coil and power output stage are combined in one complete component.

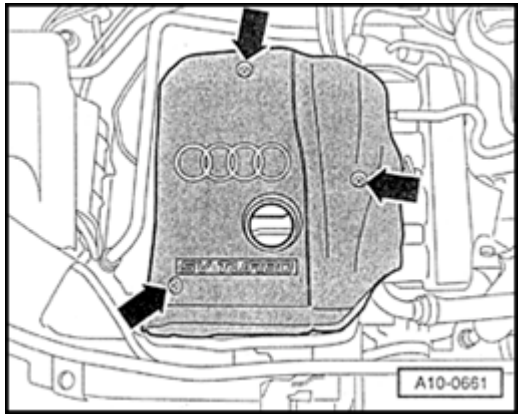

- Remove engine cover (arrows).

Recognize a non-functional or misfiring cylinder as follows:

- Check misfire recognition ⇒ Page 28-51 .

If misfires were recognized:

- Continue with test at indicated cylinder ⇒ "If faulty cylinder is recognized".

If no misfires were recognized:

- Disconnect connectors from fuel injectors in sequence with engine running and observe engine operation.

or

- Compare spark plugs from all cylinders to each other. Check electrodes for carbon fouling..

If faulty cylinder is recognized:

cardiagn.com

- Switch spark plug from faulty cylinder with one from another cylinder.

cardiagn.com

28-6

If malfunction follows the spark plug:

- Replace spark plug.

If malfunction remains at original cylinder:

- Switch ignition coil from faulty cylinder with one from another cylinder.

If malfunction follows the ignition coil:

- Replace ignition coil.

Check Ground (GND) connection

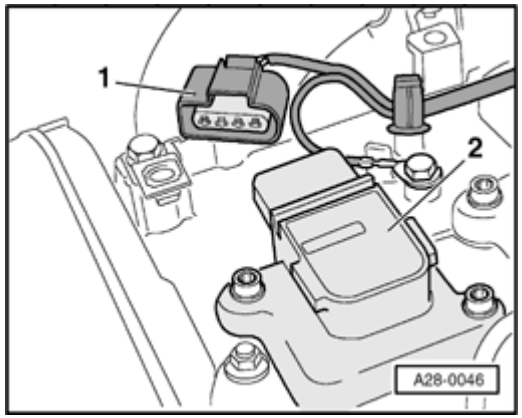

- Disconnect 4-pin harness connector -1- at ignition coil -2-.

cardiagn.com

28-7

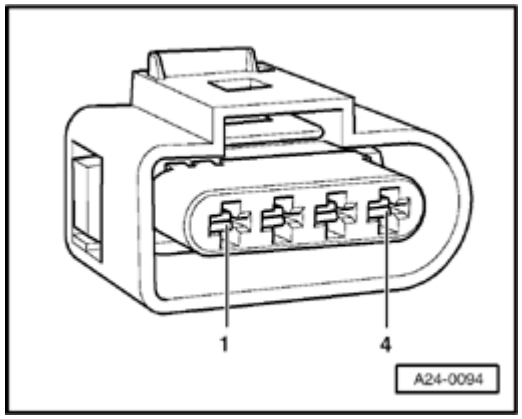

- Connect VAG1527B voltage tester as follows:

Harness connector Terminal	Measure to
2	B+
4	B+

♦ LED must light up.

If LED does not light up:

- Check wire connections.

⇒ *Electrical Wiring Diagrams, Troubleshooting & Component Locations*

If LED lights up:

- Check voltage supply

Checking voltage supply

Test requirement:

- Fuses for engine electronics OK

⇒ *Electrical Wiring Diagrams, Troubleshooting & Component Locations*

cardiagn.com

28-8

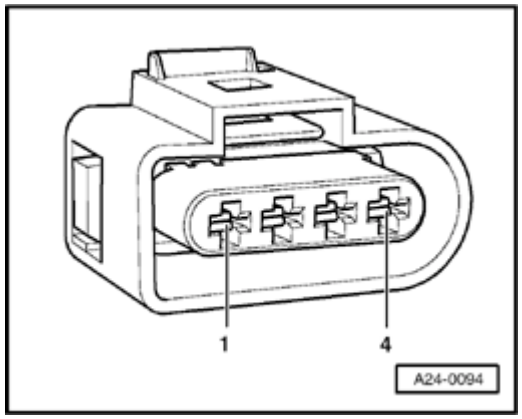

- Connect multimeter for voltage measurement as follows:

Harness connector Terminal	Measure to
1	Engine Ground (GND)

- Switch ignition on.
  - ♦ Specification: approx. battery voltage

If specified value is obtained:

- Check activation of power output stages ⇒ Page 28-10 .

If specified value is not obtained:

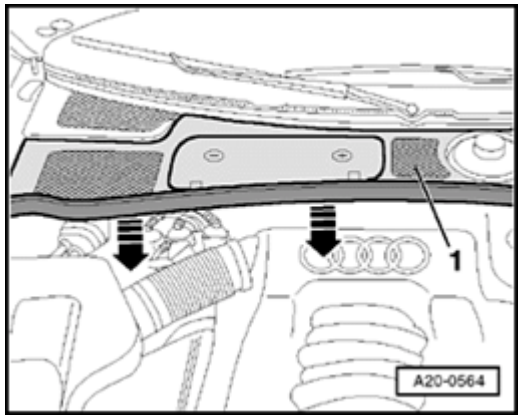

- Pull off rubber seal of plenum chamber cover in direction of arrow.
- Remove cover -1- toward front.

cardiagn.com

28-9

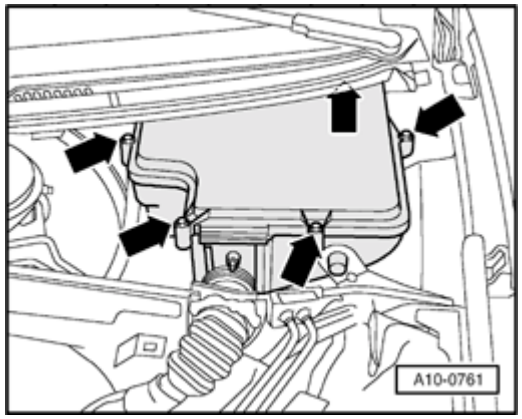

- Remove Heater Core E-box cover (arrows).

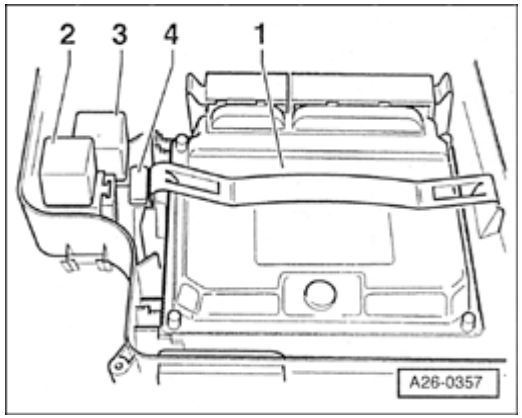

- Disconnect voltage supply relay -3-.

cardiagn.com

28-10

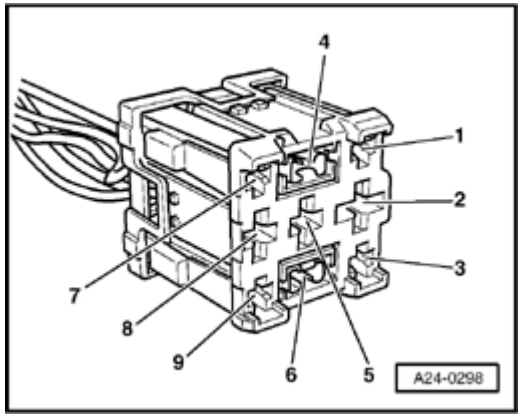

- Perform following tests marked with dots:

- Check wire connection from 3-socket relay carrier, position 2, terminal 6 to harness connector at ignition coil terminal 1.
- Check motronic Engine Control Module (ECM) power supply relay - J271- ⇒ Page 28-13 .

Checking activation of power output stages

- Remove all harness connectors to injectors.

Note:

Fuel must not be injected during the test to avoid damaging catalytic converter. Connectors must therefore be disconnected from fuel injectors.

cardiagn.com

28-11

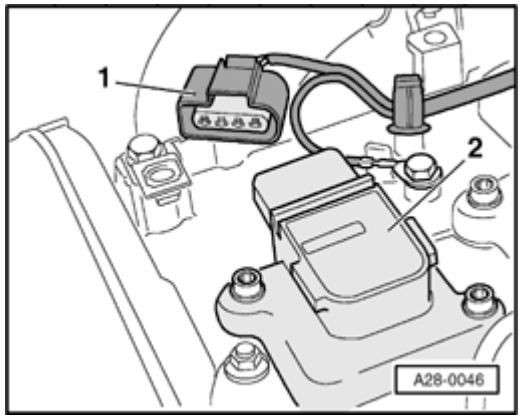

- Disconnect 4-pin harness connector -1- at ignition coil -2-.

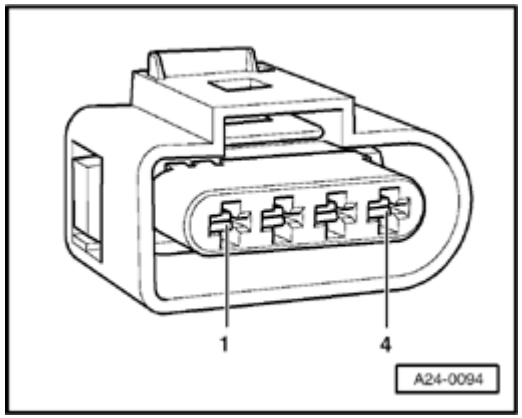

- Connect VAG1527B voltage tester to connector terminals 2 and 3.
- Operate starter briefly.
  - ♦ LED must blink (brief blink signal).

If specified values are not obtained:

- Connect VAG1598/31 test box at wiring harness to Engine Control Module (ECM), do not connect ECM ⇒ Page 24-19 .

cardiagn.com

28-12

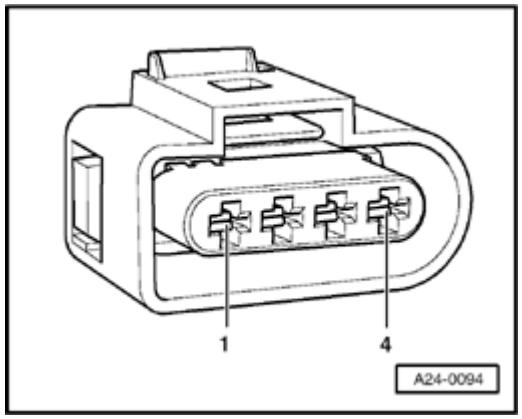

- Check following wire connections for open circuit and short circuit to Ground (GND) and B+:

Harness connector Terminal	VAG1598/31 test box Socket
3 (Cyl. 1)	102
3 (Cyl. 2)	95
3 (Cyl. 3)	103
3 (Cyl. 4)	94

- Repair open circuit or short circuit if necessary.

If no malfunctions are found in wires:

- Replace combined component, ignition coil with power output stage.

cardiagn.com

28-13

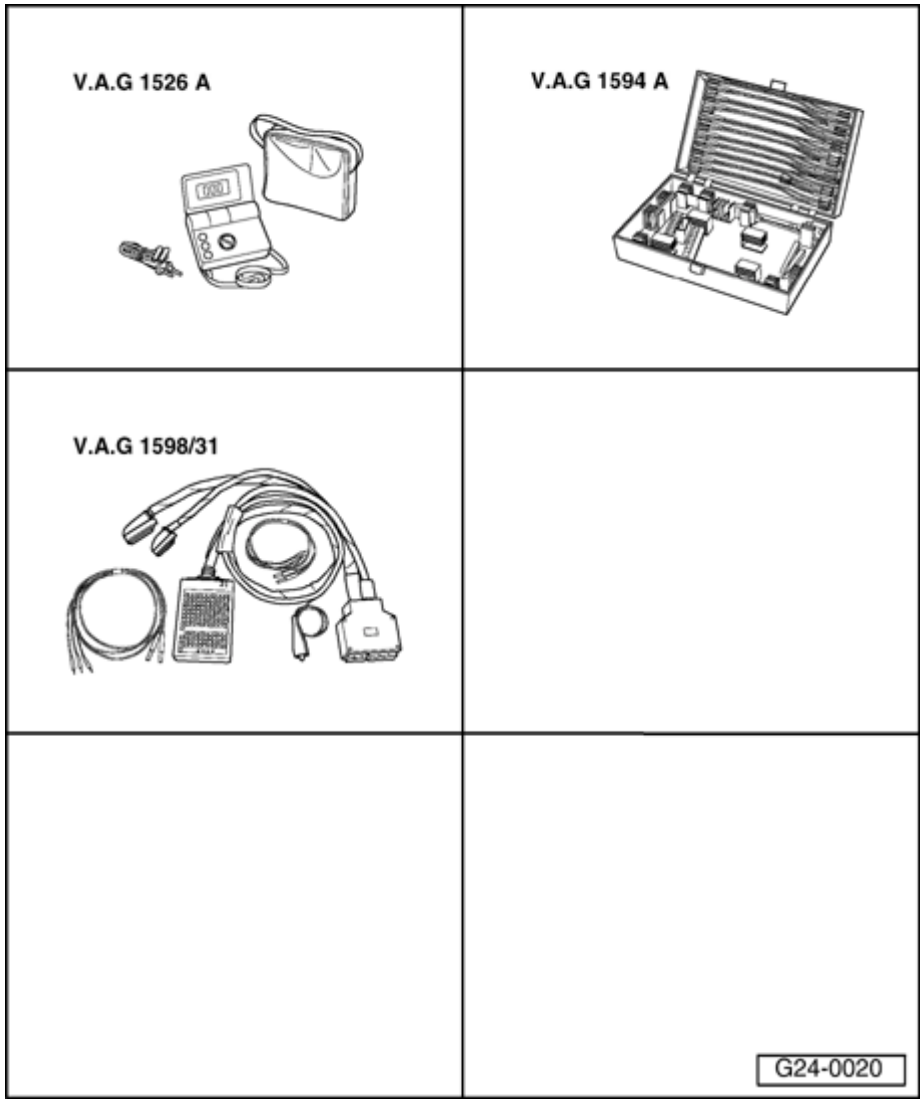

Motronic Engine Control Module (ECM) power supply relay -J271-, checking

Special tools and equipment

- VAG1526A
- VAG1594A
- VAG1598/31

cardiagn.com

28-14

Note:

The motronic Engine Control Module (ECM) power supply relay -J271- supplies voltage to the ignition coils with power output stages and the Engine Control Module (ECM) at pin 121.

Test requirement:

- Fuses for engine electronics OK

⇒ *Electrical Wiring Diagrams, Troubleshooting & Component Locations*

Test sequence

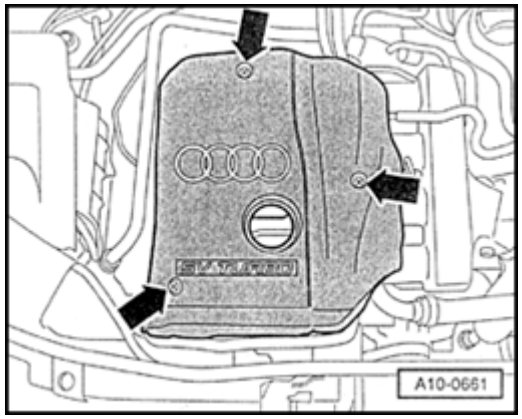

- Remove engine cover (arrows).

- Disconnect 4-pin harness connector -1- at one of ignition coils -2-.

cardiagn.com

28-15

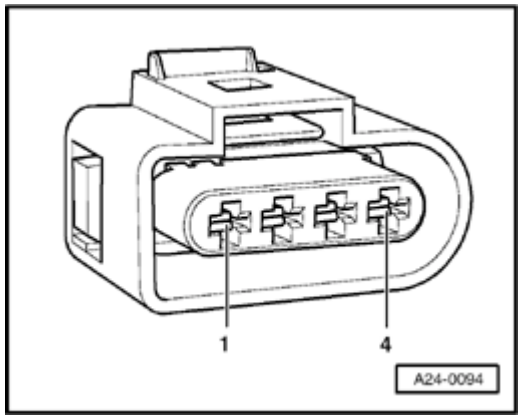

- Connect multimeter for voltage measurement as follows.

Harness connector Terminal	Measure to
1	Engine Ground (GND)

- Switch ignition on.
  - ♦ Specification: approx. battery voltage

If specified value is not obtained:

- Switch ignition off.

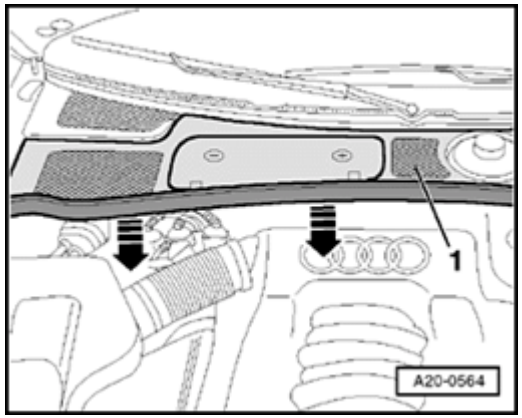

- Pull off rubber seal of plenum chamber cover in direction of arrow.
- Remove cover -1- toward front.

cardiagn.com

28-16

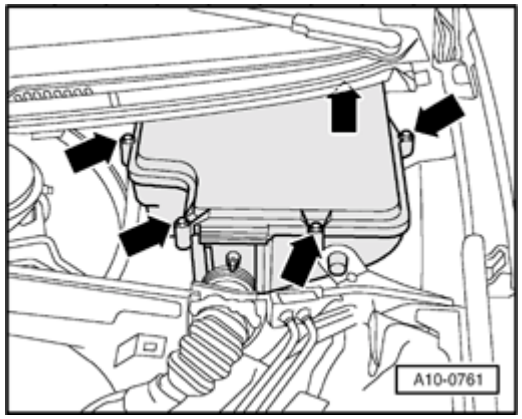

- Remove Heater Core E-box cover (arrows).

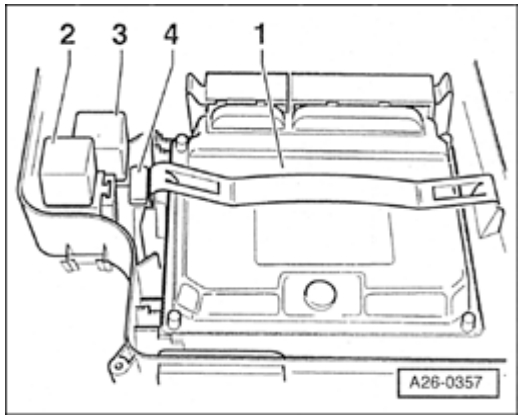

- Disconnect voltage supply relay -3-.

cardiagn.com

28-17

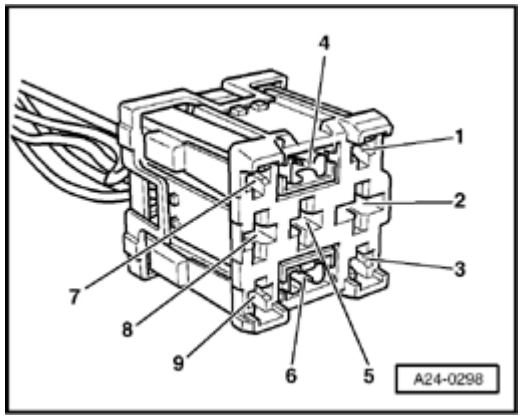

- Check following connection for open circuit according to wiring diagram:

3-socket relay carrier in E-box, plenum chamber, position 2 Terminal	Harness connector at ignition coils Terminal
6	1

- Repair open circuit if necessary.

If wire connection is OK:

- Check voltage supply of motronic Engine Control Module (ECM) power supply relay -J271- ⇒ Page 28-18 .
- Check activation of motronic Engine Control Module (ECM) power supply relay -J271- ⇒ Page 28-19 .

cardiagn.com

28-18

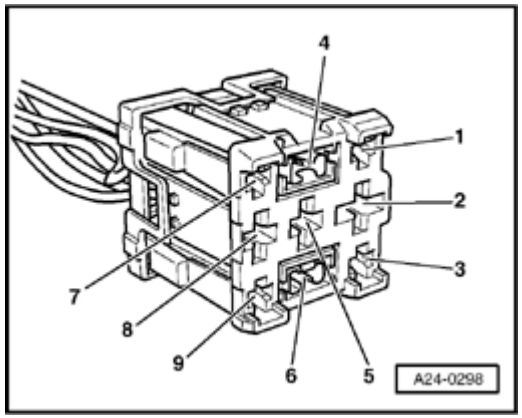

Checking voltage supply

- Connect multimeter for voltage measurement as follows.

3-socket relay carrier in E-box, plenum chamber, position 2 Terminal	Measure to
2	Engine Ground (GND)
9	Engine Ground (GND)

♦ Specification: approx. battery voltage

If specified value is not obtained:

- Check wire connection between central electronics and voltage supply relay for open circuit.

⇒ *Electrical Wiring Diagrams, Troubleshooting & Component Locations*

If no malfunctions are found in wires:

- Replace central electrics.

cardiagn.com

28-19

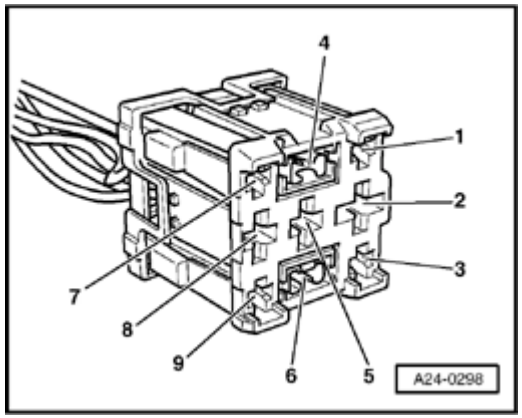

Checking activation

- Connect multimeter for voltage measurement as follows.

3-socket relay carrier in E-box, plenum chamber, position 2 Terminal	Measure to
4	B+

- Switch ignition on.
  - ♦ Specification: approx. battery voltage

If specified value is not obtained:

- Switch ignition off.
- Connect VAG1598/31 test box at wiring harness to Engine Control Module (ECM), do not connect ECM ⇒ Page 24-19 .

cardiagn.com

28-20

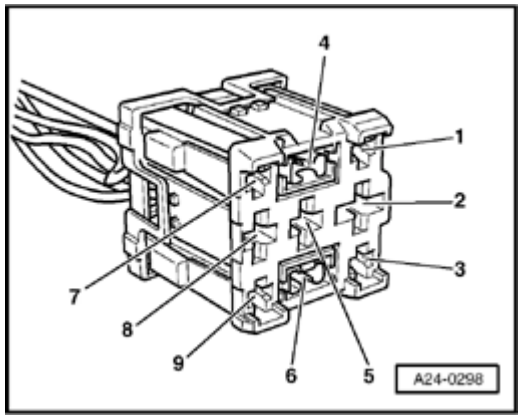

- Check following wire connection for open circuit and short circuit to Ground (GND) and B+:

Relay carrier below left cover, at bulkhead Terminal	VAG1598/31 test box Socket
4	21

- Repair open circuit or short circuit if necessary.

If no malfunctions are detected:

- Replace motronic Engine Control Module (ECM) power supply relay - J271-.

cardiagn.com

28-21

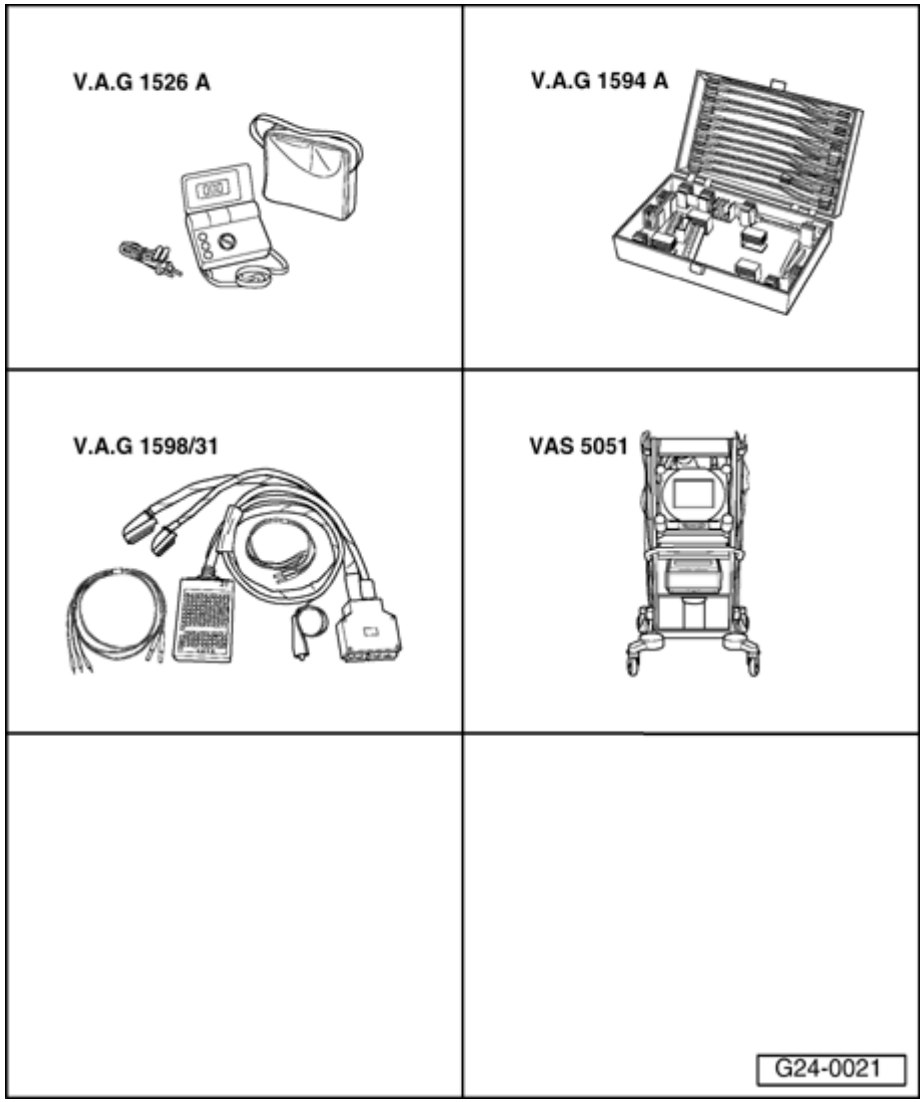

Intake Air Temperature (IAT) sensor -G42-, checking

Special tools and equipment

- VAG1526A
- VAG1594A
- VAG1598/31
- VAS5051 with VAG5051/1

- or

- VAG1551 with VAG1551/3A

cardiagn.com

28-22

Component location ⇒ Overview of component locations ⇒ Page 24-5

Test sequence

- Connect VAS5051 tester or VAG1551 scan tool and select control module for engine electronics using "address word" 01 ⇒ Page 01-10 . Engine must run at idle.

Rapid data transfer	**HELP**
Select function XX	

When indicated on display

- Press buttons -0- and -8- to select "Read Measuring Value Block" and press -Q- button to confirm input.

Read measuring value block	**Q**
Enter display group number XXX	

When indicated on display

- Press buttons -0-, -0- and -4- to select "display group number 004" and press -Q- button to confirm input.

Read Measuring Value Block 4			→
1	**2**	**3**	**4**

Indicated on display

- Check specified value for Intake Air Temperature (IAT) sensor in display field 4:

cardiagn.com

28-23

	Display fields			
	1	2	3	4
Display group 004: Intake Air Temperature (IAT), engine at idle				
Display	xxxx/min	xx.x volts	xxx.x °C	**xxx.x °C**
Indicated	Engine speed (RPM)	Battery voltage	Coolant temperature	**Intake Air Temperature (IAT)**
Functional range				**-48.0 to 143.0 °C**
Specified value	xxxx/min	12.0 to 15.0 V	80.0 to 110.0 °C	**From ambient temperature up to 110 °C[1)]**

1) If a temperature is indicated which differs greatly from ambient temperature of sensor, check sensor and sensor wires for contact resistances and open circuit.

cardiagn.com

28-24

Checking wire connections

- Connect VAG1598/31 test box at wiring harness to Engine Control Module (ECM), do not connect ECM ⇒ Page 24-19 .

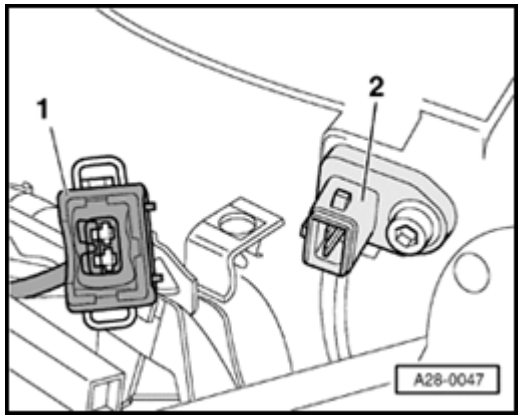

- Disconnect connector -1- at Intake Air Temperature (IAT) sensor -G42- (item no. 2).

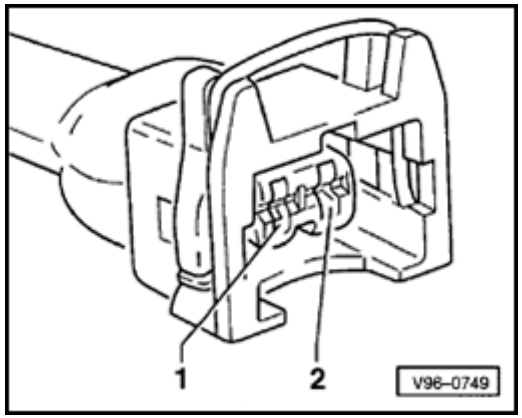

- Check following wire connections for open circuit and short circuit to Ground (GND) and B+:

Harness connector Terminal	VAG1598/31 test box Socket
1	85
2	108

- Check both wires to each other for short circuit.
- Repair open circuit or short circuit if necessary.

cardiagn.com

28-25

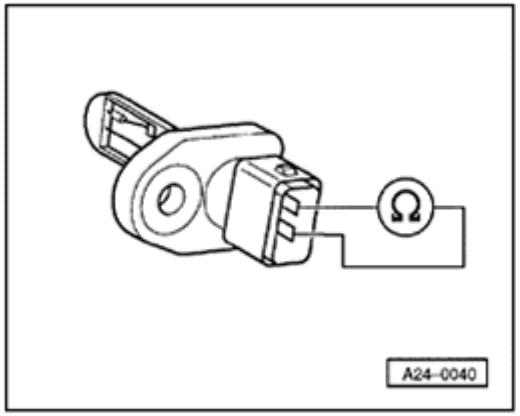

If no malfunctions are found in wires:

Check sensor:

- Connect multimeter at sensor for resistance measurement.

Specified values

Temperature °C	Resistance kΩ
-20	approx. 13.8
0	approx. 5.5
20	approx. 2.4
40	approx. 1.1
60	approx. 0.6

If specified value is not obtained:

- Replace Intake Air Temperature (IAT) sensor.

cardiagn.com

28-26

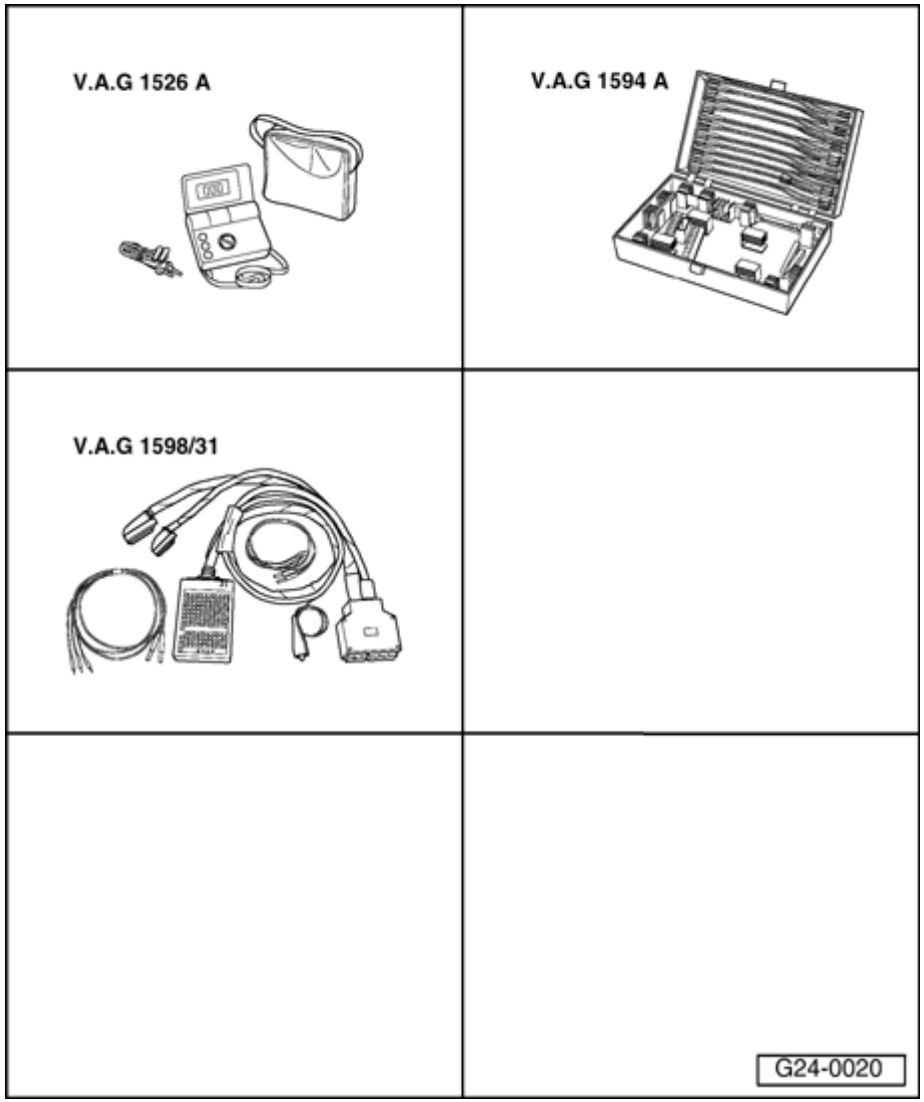

Engine speed (RPM) sensor -G28-, checking

Special tools and equipment

- VAG1526A
- VAG1594A
- VAG1598/31

cardiagn.com

28-27

Component location ⇒ Overview of component locations ⇒ Page 24-5

Note:

The engine speed (RPM) sensor detects RPM and reference marks. The engine cannot be started without a signal from the engine speed (RPM) sensor -G28-. If the engine speed (RPM) sensor -G28- signal fails while the engine is running, the engine will stop immediately.

Test sequence

- Before performing test, check sensor for proper installation and proper fitting.

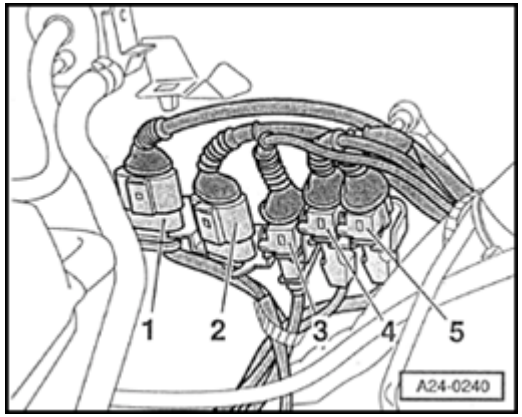

- Disconnect harness connector for engine speed (RPM) sensor -G28- (item no. 3) in engine compartment.

Note:

Coolant reservoir screws must be removed and coolant reservoir must be placed to side in order to access the harness connector. The coolant hoses can remain connected.

cardiagn.com

28-28

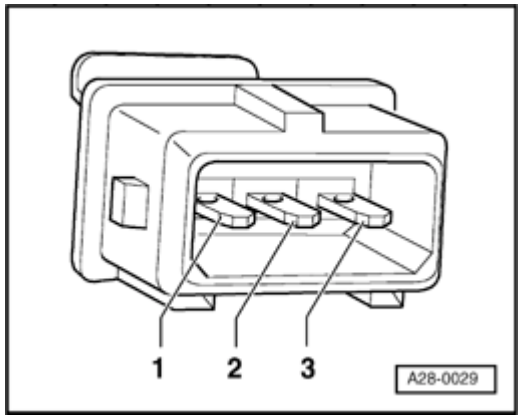

- Connect multimeter between terminal 1 and 2 for resistance measurement.
  - Specification: 730 to 1000

Note:

Resistance value of the engine speed (RPM) sensor is based on a temperature of 20° C. Resistance increases as temperature increases.

If specified value is not obtained:

- Replace engine speed (RPM) sensor.

If specified value is obtained:

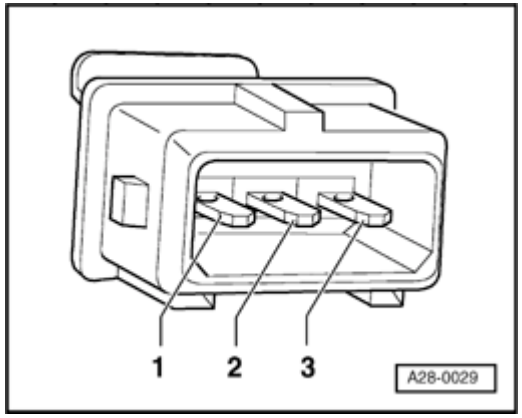

- Connect multimeter to terminals 1 and 3 (shielding) and to terminals 2 and 3 (shielding) for resistance measurement.
  - Specification: ∞ each (no continuity)

If specified value is not obtained:

- Replace engine speed (RPM) sensor.

cardiagn.com

28-29

If specified value is obtained:

- Connect VAG1598/31 test box at wiring harness to Engine Control Module (ECM), do not connect ECM ⇒ Page 24-19 .

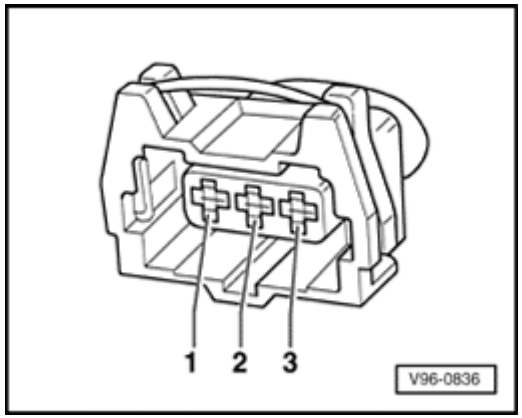

- Check following wire connections for open circuit and short circuit to Ground (GND) and B+:

Harness connector Terminal	VAG1598/31 test box Socket
1 (signal)	82
2 (Ground -GND-)	90
3 (shielding)	108

- Repair open circuit or short circuit if necessary.

If no malfunctions are found in wires:

- Replace Engine Control Module (ECM) ⇒ Page 24-23

cardiagn.com

28-30

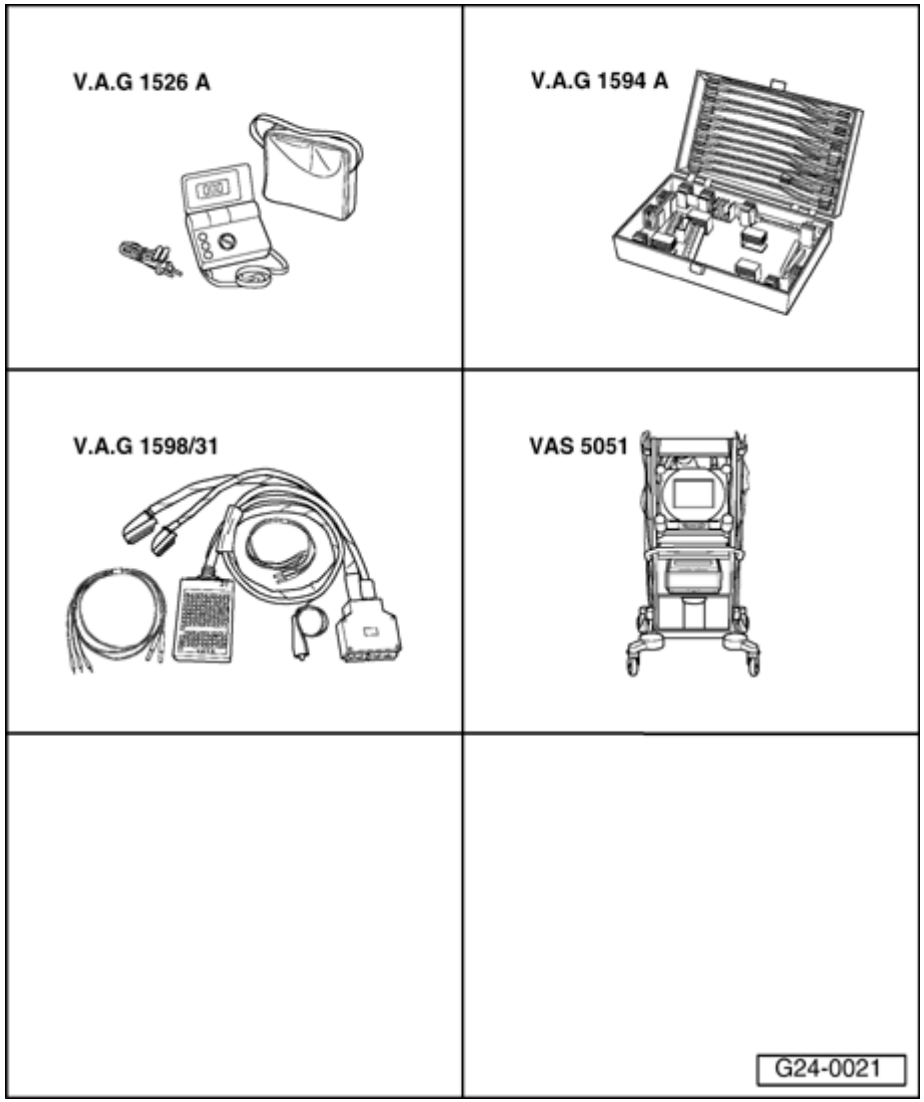

Engine Coolant Temperature (ECT) sensor -G62-, checking

Special tools and equipment

- VAG1526A
- VAG1594A
- VAG1598/31
- VAS5051 with VAG5051/1

- or

- VAG1551 with VAG1551/3A

cardiagn.com

28-31

Component location ⇒ Overview of component locations ⇒ Page 24-5

Test requirement:

- Engine cold

Test sequence

- Connect VAS5051 tester or VAG1551 scan tool and select control module for engine electronics using "address word" 01 ⇒ Page 01-10 . Engine must run at idle.

Rapid data transfer	**HELP**
Select function XX	

When indicated on display

- Press buttons -0- and -8- to select "Read Measuring Value Block" and press -Q- button to confirm input.

Read measuring value block	**Q**
Enter display group number XXX	

When indicated on display

- Press buttons -0-, -0- and -4- to select "display group number 004" and press -Q- button to confirm input.

Read Measuring Value Block 4			→
1	**2**	**3**	**4**

Indicated on display

- Check indication in display field 3.

cardiagn.com

28-32

	Display fields			
	1	2	3	4
Display group 004: Coolant temperature, engine at idle				
Display	xxxx/min	xx.x volts	**xxx.x °C**	xxx.x °C
Indicated	Engine speed (RPM)	Battery voltage	**Coolant temperature**	Intake Air Temperature (IAT)
Functional range			**-48.0 to 143.0 °C**	
Specified value	xxxx/min	12.0 to 15.0 V	**Temperature value must rise evenly**	From ambient temperature up to 110 °C

If display field 3 does not have a realistic indication:

- Disconnect connector at coolant temperature sensor.

Coolant temperature sensor with square connector:

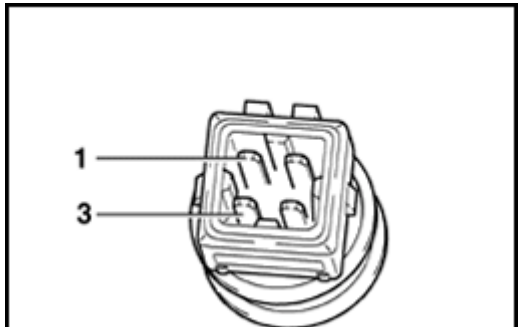

- Connect multimeter between terminal 1 and 3 of sensor for resistance measurement.

cardiagn.com

28-33

Coolant temperature sensor with oval connector:

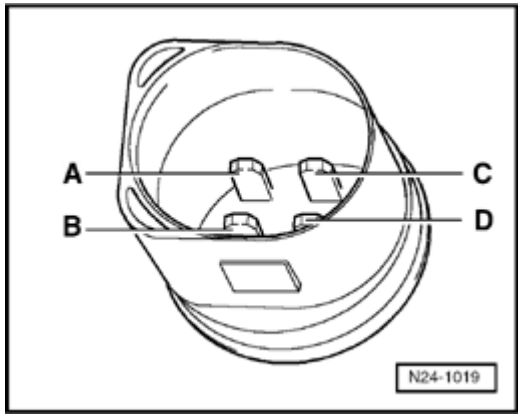

- Connect multimeter between terminal C and D of sensor for resistance measurement.

All models:

Range A shows the resistance values for the temperature range from 0-50 °C, and range B shows the values for the temperature range from 50-100 °C.

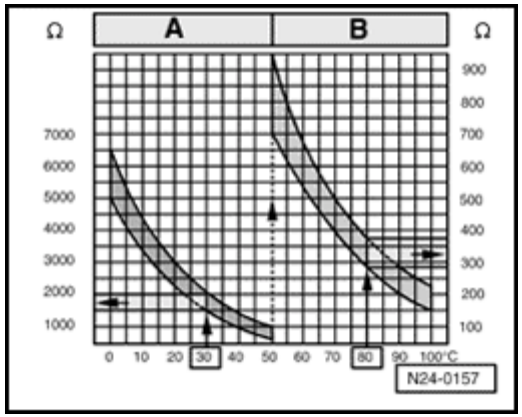

Read-out examples:

- 30 °C corresponds to a resistance of 1500 to 2000 Ω
- 80 °C corresponds to a resistance of 275 to 375 Ω

If specified value is not obtained:

- Replace coolant temperature sensor.

cardiagn.com

28-34

If specified value is obtained:

- Connect VAG1598/31 test box at wiring harness to Engine Control Module (ECM), do not connect ECM ⇒ Page 24-19 .

Coolant temperature sensor with square connector:

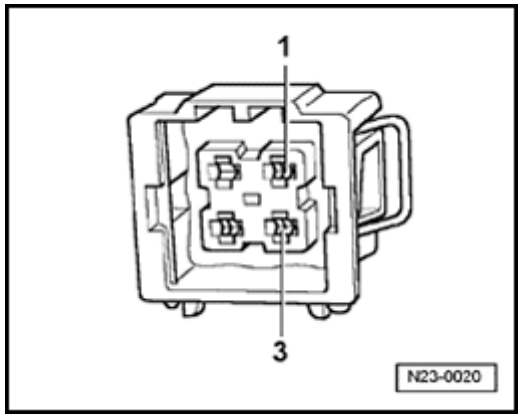

- Check following wire connections for open circuit and short circuit to Ground (GND) and B+:

Harness connector Terminal	VAG1598/31 test box Socket
1 (signal)	93
3	108

Coolant temperature sensor with oval connector:

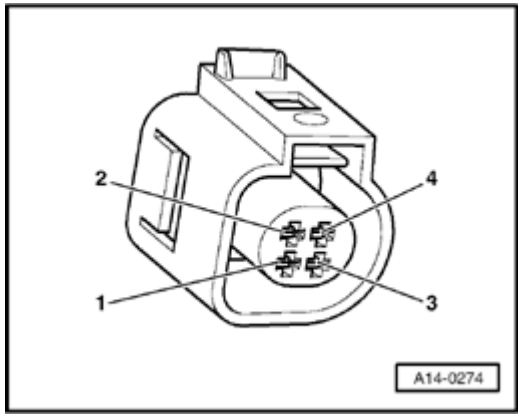

- Check following wire connections for open circuit and short circuit to Ground (GND) and B+:

Harness connector Terminal	VAG1598/31 test box Socket
3	108
4 (signal)	93

cardiagn.com

28-35

All models:

- Check both wires to each other for short circuit.

- Repair open circuit or short circuit if necessary.

If no malfunctions are found in wires:

- Replace Engine Control Module (ECM) ⇒ Page 24-23

cardiagn.com

28-36

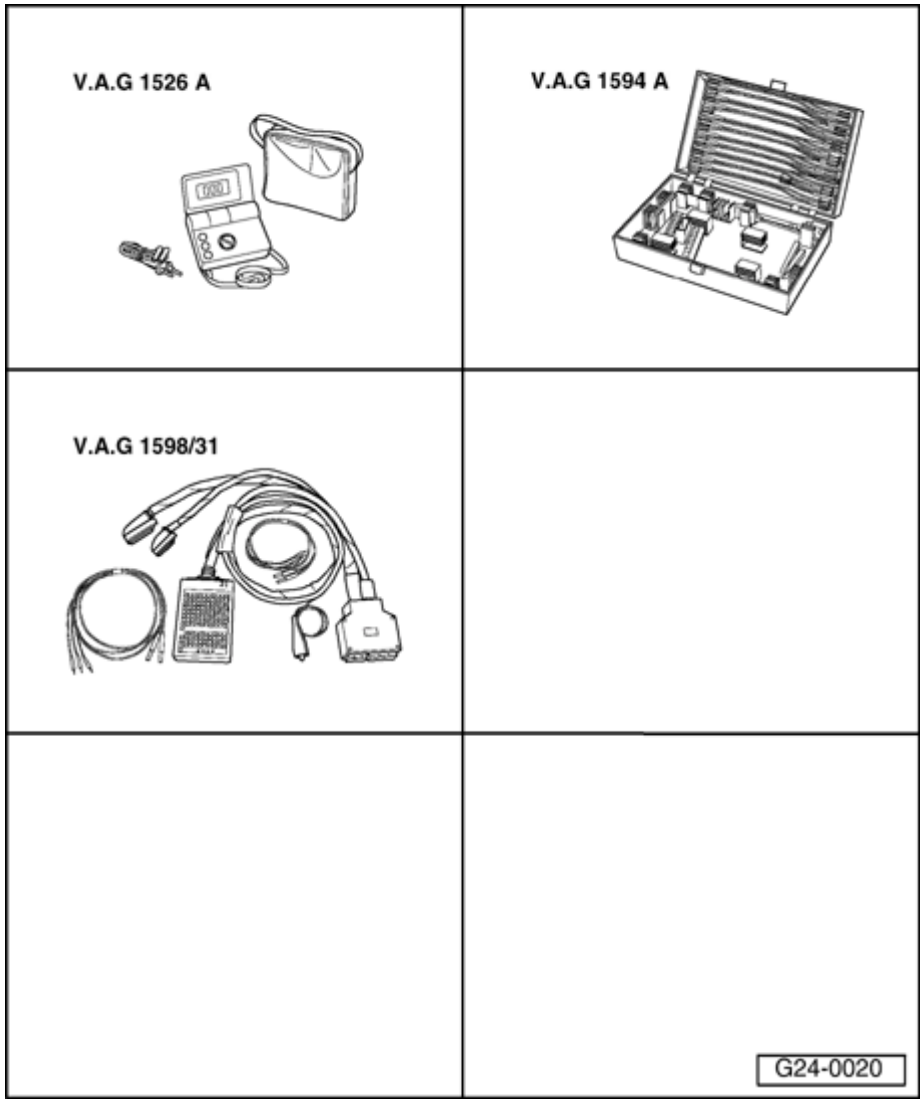

Voltage supply for control module, checking

Special tools and equipment

- VAG1526A
- VAG1594A
- VAG1598/31

cardiagn.com

28-37

Test requirements:

- Fuses for engine electronics OK

⇒ *Electrical Wiring Diagrams, Troubleshooting & Component Locations*

- Battery voltage at least 12.7 V

- Generator OK

Test sequence

- Connect VAG1598/31 test box at wiring harness to Engine Control Module (ECM), do not connect ECM ⇒ Page 24-19 .

- Switch ignition on.

Note:

- *The plus voltage supply for the Engine Control Module (ECM) travels via terminal 3 and 121 (terminal 15) as well as terminal 62 (terminal 30).*

cardiagn.com

- *Ground (GND) supply of the Engine Control Module (ECM) travels via connector terminal 1 and terminal 2.*

cardiagn.com

28-38

- Connect multimeter for voltage measurement as follows:

VAG1598/31 test box Socket	Measure to
1	B+
2	B+
62	Engine Ground (GND)

◆ Specification: approx. battery voltage

- Connect multimeter for voltage measurement as follows:

VAG1598/31 test box Socket	Measure to
3	Engine Ground (GND)

- Switch ignition on.

◆ Specification: approx. battery voltage

If specified values are not obtained:

cardiagn.com

- Check wire connections.

⇒ *Electrical Wiring Diagrams, Troubleshooting & Component Locations*

cardiagn.com

28-39

- Connect multimeter for voltage measurement as follows:

VAG1598/31 test box Socket	Measure to
121 [1)]	Engine Ground (GND)

[1)] The motronic Engine Control Module (ECM) power supply relay -J271- continues to direct current to terminal 121 of the Engine Control Module (ECM) for up to 15 minutes after ignition is switched off.

- Switch ignition on.

  ♦ Specification: approx. battery voltage

If specified value is not obtained:

- Check wire connections.

⇒ *Electrical Wiring Diagrams, Troubleshooting & Component Locations*

- Check motronic Engine Control Module (ECM)

cardiagn.com

power supply relay -J271- ⇒ Page 28-13 .

cardiagn.com

28-40

Knock recognition control stop, checking

If a DTC is stored regarding "Knock control regulation limit reached":

- Perform following tests:

	Possible cause	Corrective action
DTC for all cylinders or Cylinder 1/2 or 3/4	♦ Poor fuel quality	- Change fuel quality ⇒ *Operating instructions*
	♦ Knock sensor tightened to incorrect torque	- Loosen knock sensors and tighten to 20 Nm
	♦ Knock sensor faulty	- Check knock sensor ⇒ Page 28-41
	♦ Corrosion at harness connector	- Check harness connector
	♦ Engine accessories loose	- Secure engine accessories
DTC for one Cylinder	♦ Engine damage	- Check compression pressure
	♦ Engine accessories loose	- Secure engine accessories

cardiagn.com

28-41

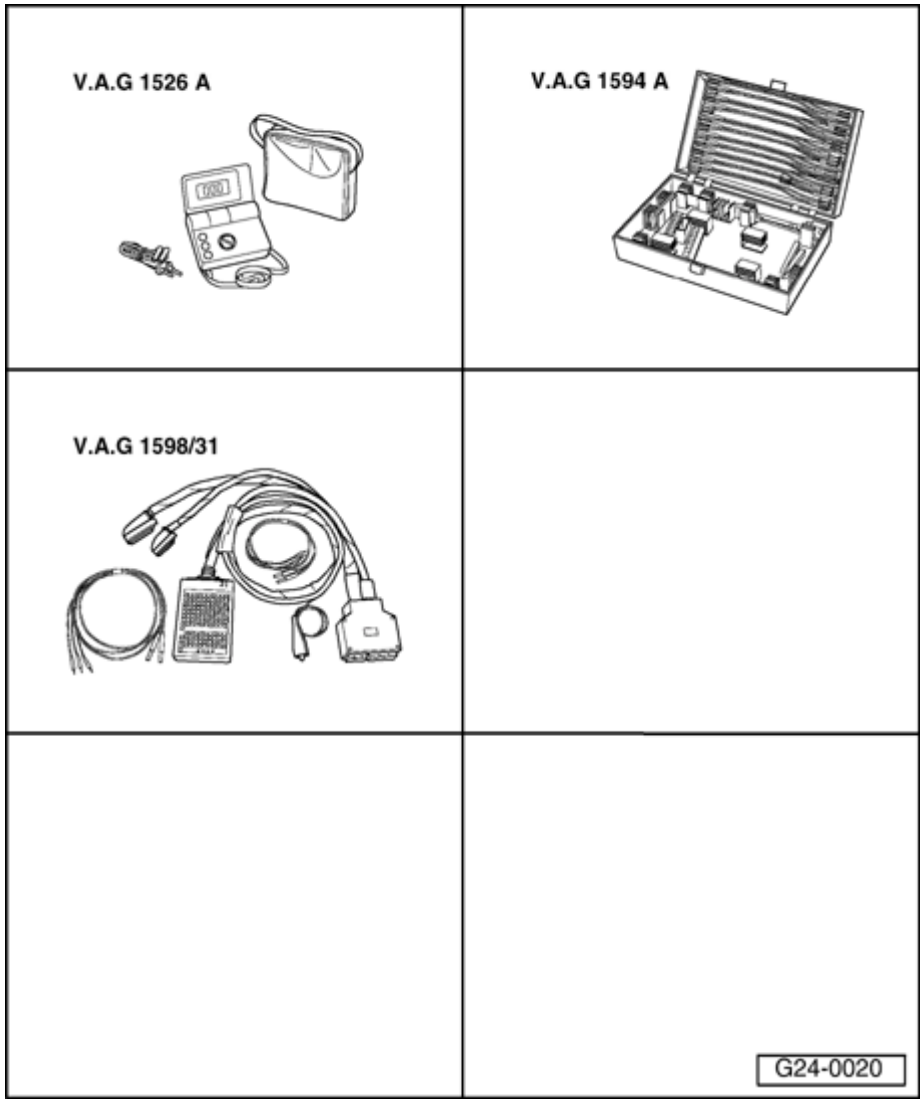

Knock sensors, checking

Special tools and equipment

- VAG1526A
- VAG1594A
- VAG1598/31

cardiagn.com

28-42

Component location ⇒ Overview of component locations ⇒ Page 24-5

Note:

- *Knock Sensor (KS) 1 -G61- and Knock Sensor (KS) 2 -G66- themselves cannot be electrically tested.*
- *Use only gold-plated terminals when servicing harness connector for knock sensors.*
- *For the knock sensors to function properly, it is important that tightening torque be exactly 20 Nm.*
- *Check harness connector from knock sensor to wiring harness for corrosion.*

Checking knock sensor wiring

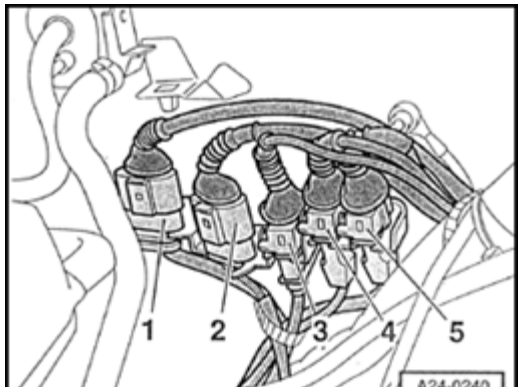

- Disconnect harness connector for Knock Sensor (KS) 1 -G61- (item no. 5) or Knock Sensor (KS) 2 -G66- (item no. 4) in engine compartment.

cardiagn.com

28-43

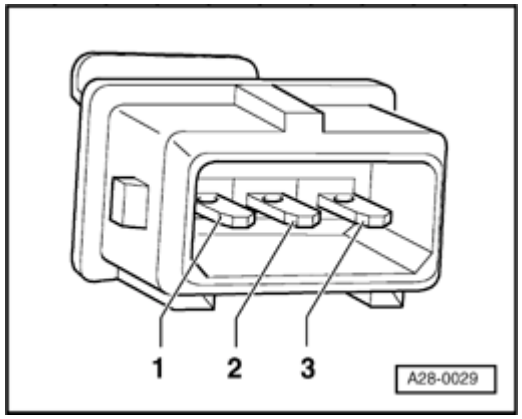

- Check all three terminals at knock sensor connector for short circuit to each other (terminal 1+2, 1+3, 2+3).
  - Specification: ∞ (no continuity) - the wires must not have any connection to each other
- If there is no connection , replace knock sensor.
- If no short circuit is detected, check knock sensor wires:

Check wires from knock sensors to Engine Control Module (ECM).

- Connect VAG1598/31 test box at wiring harness to Engine Control Module (ECM), do not connect ECM ⇒ Page 24-19 .
- Check following wire connections for open circuit and short circuit to Ground (GND) and B+:

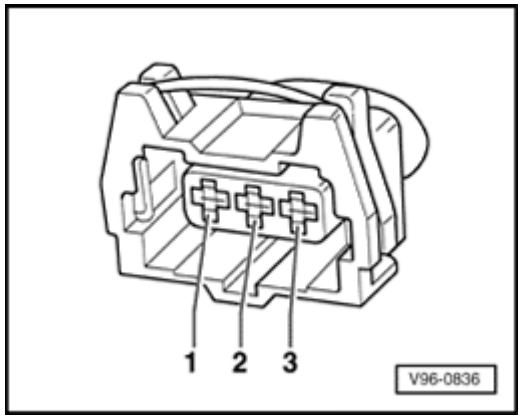

- Knock Sensor (KS) 1 -G61- (cylinder 1/2)

Harness connector Terminal	VAG1598/31 test box Socket
1 (signal)	106
2 (Ground -GND-)	99
3 (shielding)	108

cardiagn.com

28-44

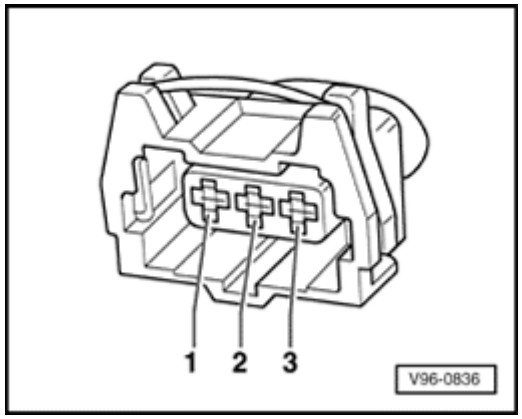

- Knock Sensor (KS) 2 -G66- (cylinder 3/4)

Harness connector Terminal	VAG1598/31 test box Socket
1 (signal)	107
2 (Ground -GND-)	99
3 (shielding)	108

- Repair open circuit or short circuit if necessary.

cardiagn.com

28-45

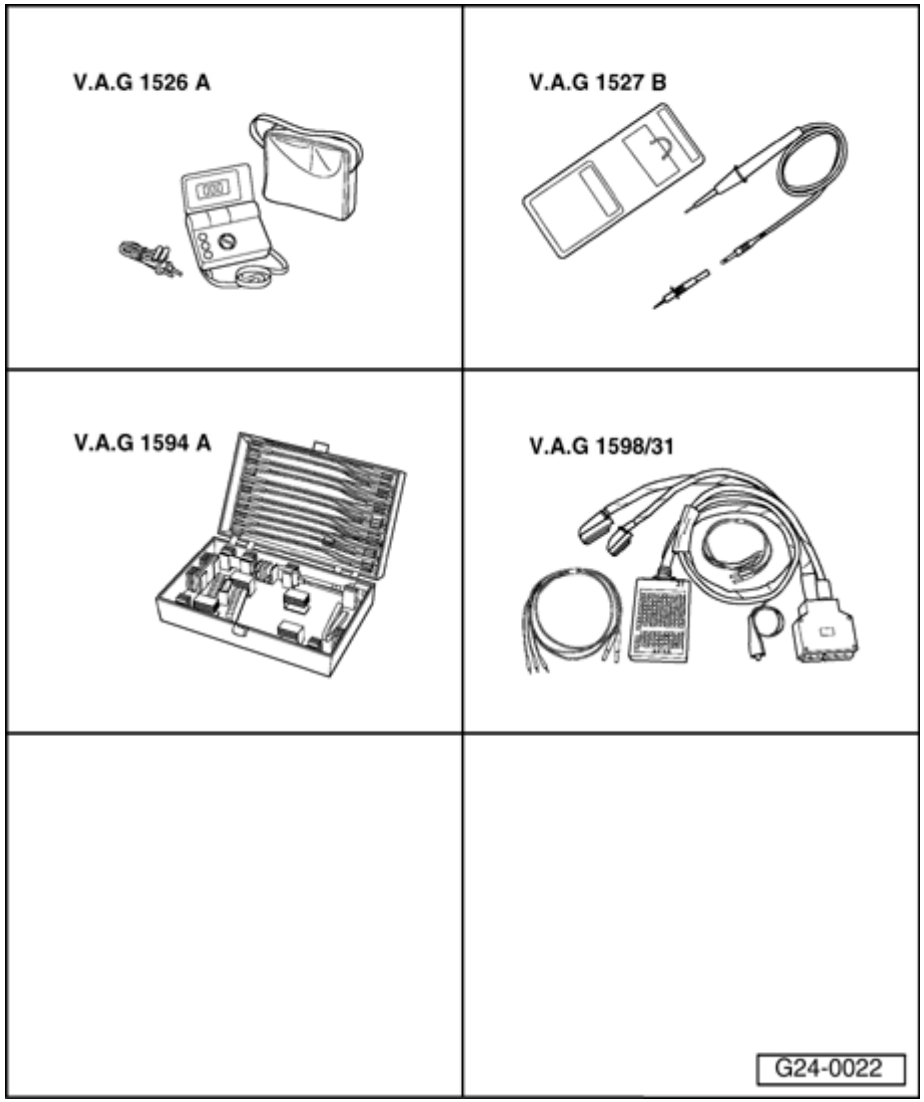

Camshaft Position (CMP) sensor 2 -G40-, checking

Special tools and equipment

- VAG1526A
- VAG1527B
- VAG1594A
- VAG1598/31

cardiagn.com

28-46

Component location ⇒ Overview of component locations ⇒ Page 24-5

The Camshaft Position (CMP) sensor provides the ignition position for cylinder 1.

For failure, knock control is switched off and the ignition angle is retarded slightly since a cylinder allocation is no longer possible. In addition, the boost pressure of the turbocharger is decreased.

Engine will continue to run without Camshaft Position (CMP) sensor signal and can also be restarted:

- When a malfunction is recognized, the Engine Control Module (ECM) initiates one ignition spark per cylinder for each crankshaft rotation.
- The offset of one engine rotation will have no noticeable effect on the injection. Instead of occurring with intake valves open, injection will be "pre-loaded" (in front of closed intake valve). This has only a minor effect on the quality of the mixture preparation.

cardiagn.com

28-47

Checking activation

- If installed, slide back rubber grommet on connector for Camshaft Position (CMP) sensor, but leave connector connected.

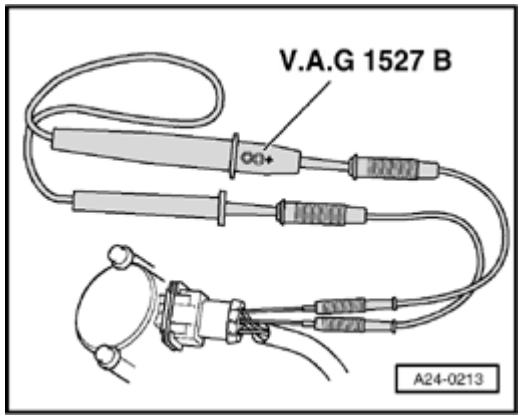

- Connect VAG1527B voltage tester between sockets 2 (CMP sensor signal) and 1 (B+).

Note:

Connector socket numbers are shown on the rear side of the connector.

- Operate starter for a few seconds.
  - ♦ LED must blink.

Note:

Voltage testers do not go out completely during low current pick-up between activations by the ECM, but rather continue to glow a little and then get significantly brighter during activation.

cardiagn.com

28-48

If LED does not blink:

Checking voltage supply

- Disconnect connector at Camshaft Position (CMP) sensor.

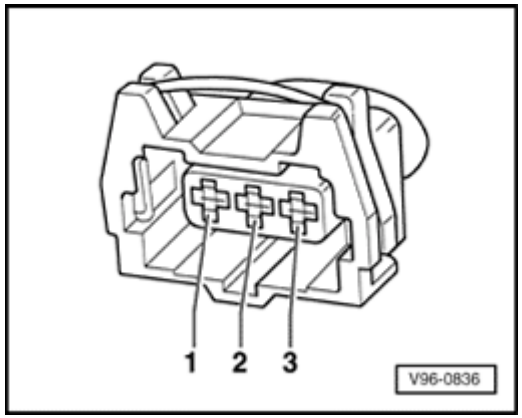

- Connect multimeter for voltage measurement as follows:

Harness connector Terminal	Measure to
1	Engine Ground (GND)

- Switch ignition on.
  - ♦ Specification: about 5 V

Checking signal wire

- Connect multimeter for voltage measurement as follows:

Harness connector Terminal	Measure to
2	Engine Ground (GND)

- Switch ignition on.
  - ♦ Specification: approx. battery voltage

cardiagn.com

28-49

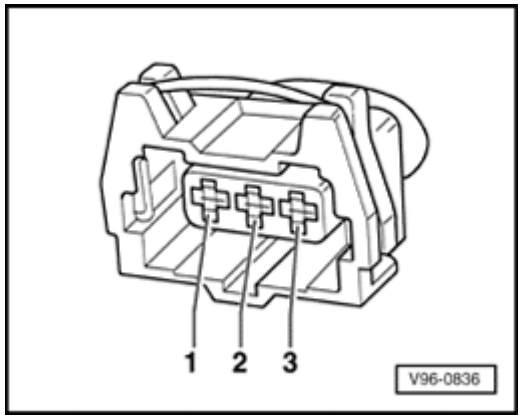

Checking Ground (GND) wire

- Check following wire connection for open circuit and short circuit to B+:

Harness connector Terminal	Measure to
3	B+

- Repair open circuit or short circuit if necessary.

If all specified values are being reached and the LED does not blink (measured between terminal 1 and 2 with starter and connector connected):

- Replace Camshaft Position (CMP) sensor.

If specified values are not obtained:

Checking wire connections between Camshaft Position (CMP) sensor and Engine Control Module (ECM)

- Connect VAG1598/31 test box at wiring harness to Engine Control Module (ECM), do not connect ECM ⇒ Page 24-19 .

cardiagn.com

28-50

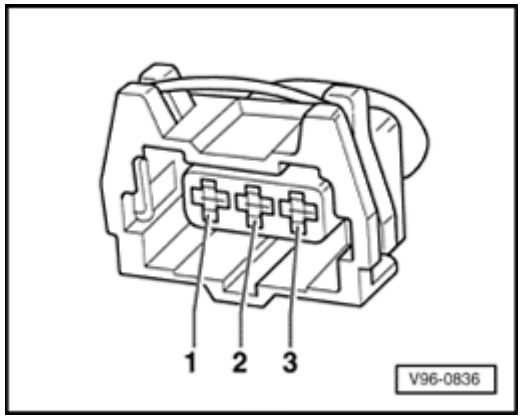

- Check following wire connections for open circuit and short circuit to Ground (GND) and B+:

Harness connector Terminal	VAG1598/31 test box Socket
1 (B+)	98
2 (signal)	86
3 (Ground -GND-)	108

- Repair open circuit or short circuit if necessary.

If, after erasing the DTC memory for a test, a DTC relating to the Camshaft Position (CMP) sensor (hall sensor) is indicated again, even though all previous tests were OK, the following malfunction is possible:

- ♦ Shutter wheel for Camshaft Position (CMP) sensor is not aligned properly.

- Unscrew Camshaft Position (CMP) sensor and check whether shutter wheel is mounted properly at camshaft (if mounted improperly, locking lug will get squished when mounting bolt is tightened).
- If position of shutter wheel is OK, check allocation of crankshaft/camshaft.

⇒ *Repair Manual, 1.8 Liter 4-Cyl. 5V Turbo Engine Mechanical, Engine Code(s): AEB, ATW, Repair Group 15; Valvetrain, servicing*

cardiagn.com

28-51

Misfire recognition, checking

Special tools and equipment

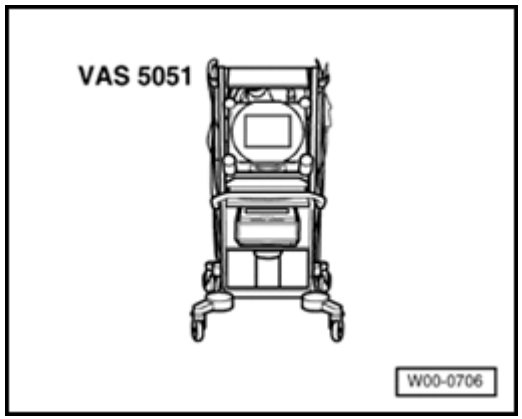

- VAS5051 with VAG5051/1

  or

- VAG1551 with VAG1551/3A

Test sequence

- Connect VAS5051 tester or VAG1551 scan tool and select control module for engine electronics using "address word" 01 ⇒ Page 01-10 . Engine must run at idle.

Rapid data transfer	**HELP**
Select function XX	

When indicated on display

- Press buttons -0- and -8- to select "Read Measuring Value Block" and press -Q- button to confirm input.

Read measuring value block	**Q**
Enter display group number XXX	

When indicated on display

- Press buttons -0-, -1- and -4- to select "display group number 014" and press -Q- button to confirm input.

Read Measuring Value Block 14			→
1	**2**	**3**	**4**

When indicated on display

- Check misfire recognition.

cardiagn.com

28-52

	Display fields			
	1	2	3	4
Display group 014: Misfire recognition				
Display	xxx /min	xxx %	**xxx**	**---**
Indicated	Engine speed (RPM)	Load	**Number of ignition misfires**	**Misfire recognition**
Functional range				**activated** **locked**
Specified value	xxxx/min	15 to 33 %	**0**	**activated**
Note			**If the specified value is exceeded: Check combustion misfires of individual cylinders** ⇒ Page 28-53	**If ignition misfires are to be expected due to operation conditions (e.g. warm-up, deceleration shut-down), misfire recognition is deactivated**

If specified value is obtained:

- Press→button.

Rapid data transfer HELP
Select function XX

Indicated on display (function selection):

If specified value is not obtained:

- Press -C- button.

cardiagn.com

28-53

Check misfire recognition of the individual cylinders.

Read measuring value block Q

Enter display group number XXX

When indicated on display

- Press buttons -0-, -1- and -5- to select "display group number 015" and press -Q- button to confirm input.

Read Measuring Value Block 15 →

1 2 3 4

When indicated on display

- Check misfire recognition in display fields 1 to 4.

	Display fields			
	1	2	3	4
Display group 015: Misfire recognition of cylinders 1, 2 and 3				
Display	**xxx**	**xxx**	**xxx**	**---**
Indicated	**Number of combustion misfires, cylinder 1**	**Number of combustion misfires, cylinder 2**	**Number of combustion misfires, cylinder 3**	**Misfire recognition**
Functional range				**activated** **locked**
Specified value	**0**	**0**	**0**	**activated**
Note	**If the specified value is exceeded: Evaluation ⇒ Page 28-55**			**---**

cardiagn.com

28-54

- Press -C- button.

Read measuring value block Q
Enter display group number XXX

When indicated on display

- Press buttons -0-, -1- and -6- to select "display group number 016" and press -Q- button to confirm input.

Read Measuring Value Block 16 →
1 2 3 4

When indicated on display

- Check misfire recognition in display fields 1 and 4:

	Display fields			
	1	2	3	4
Display group 016: Misfire recognition of cylinder 4				
Display	**xxx**			**---**
Indicated	**Number of combustion misfires, cylinder 4**			**Misfire recognition**
Functional range				**activated** **locked**
Specified value	**0**			**activated**
Note	**If the specified value is exceeded: Evaluation ⇒ Page 28-55**			**---**

cardiagn.com

28-55

Evaluation display group 014, display field 3 and display group 015 and 016, display fields 1, 2 and 3.

Display field: 3	Possible cause	Corrective action
Larger than 0	♦ spark plug faulty ♦ spark plug connector faulty ♦ Ignition coil or power output stage faulty	- Check spark plugs and ignition wires with connector - Ignition coils with power output stages. Checking ⇒ Page 28-4
	♦ Fuel injector faulty	- Check fuel injectors ⇒ Page 24-38

cardiagn.com